EcoFish GLOBAL

Revision 7 - 9/8/2018

EcoFish GLOBAL

ABERDEEN HARBOUR EXPANSION PROJECT (AHEP)
UNDERWATER NOISE + PASSIVE ACOUSTIC MONITORING PROCEDURE
AUGUST 2018

1.1 Introduction

This method statement has been prepared to outline the background for blasting and bubble curtain mitigation and detail the proposed effectiveness testing, reporting, compliance and predicted model validation, instrumentation and approach, measurements and data analysis and reporting. It should be read in conjunction with the Drilling & Blasting Methodology-Environmental Controls Marine Mammals

1.2 Background (Blasting and Bubble Curtain)

1.2.1 Blasting

Explosives will be used below the seabed to fracture rock to allow the backhoe dredger to remove it for reuse. When blasting occurs, the following conditions will be adhered to:

- Blasting is restricted to daylight hours unless during exceptional circumstances.
- A maximum of two blasts a day.
- A process to record and report, in writing to the licensing authority, within 48 hours, instances where blasting has occurred, out with daylight hours, due to exceptional circumstances.
- The minimum amount of blasting will be undertaken using 20kg charge weights.
- No blasting allowed on a Sunday.
- No blasting during periods of extreme bad weather i.e. high wind/wave conditions. The drill and blast rig is limited to about 0.5m wave height, thus there will be no blasting if these conditions prevail. Blasting will not take place in a Beaufort Sea State greater than 3 (unless agreed otherwise with MS-LOT) due to the efficacy of the MMO and PAM mitigation measures. The bubble curtain supplier has confirmed that wind and wave height has no impact on the performance of the curtain.

Blasting in the northern area will be scheduled so that it is undertaken behind a partially constructed breakwater, so that there is no ‘direct line of site’ between the blasting and open water, as displayed in Figure 1.1. Blasting will also occur behind a double bubble curtain, which will be located in two different layouts to attenuate any blasting noise reaching ‘open water,’. One layout stretches from the south of Nigg Bay to North Breakwater and the other from the southern shore of Nigg Bay, southwards, which will form an arc around the South Breakwater trench areas. This complies with the Construction Marine Licence 05965/16/0 conditions.

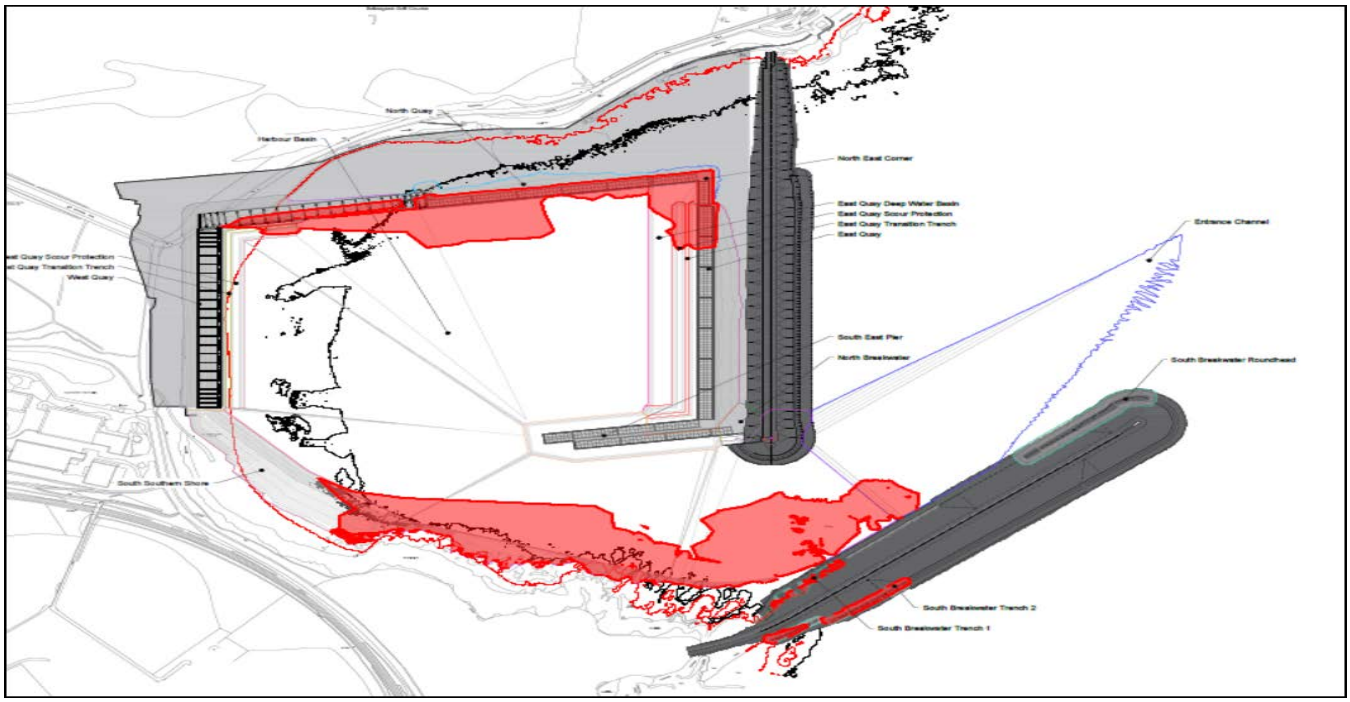

Figure 1.1 - Rock Blasting Zones - North and South

1.2.2 Bubble Curtain

The purpose of a bubble curtain is to attenuate the propagation of underwater sound arising from a high-intensity noise source such as an explosion. The curtain is formed from a collection of air bubbles. Each air bubble forms an impedance contrast in the water from, which the sound is reflected, while an ensemble of bubbles act as a series of high impedance scatterers. The curtain therefore presents a loss-inducing boundary between the sound source and the remaining water column. Note there are two separate hoses creating two walls of bubbles.

A perforated hose is laid on the seabed adjacent to the project area. Air is pumped through the hose which subsequently leaks through the holes thus producing bubbles which rise to the surface of the sea. As the bubbles rise, the surrounding hydrostatic pressure falls, the bubbles grow in size and also tend to fuse together leading to the formation of a curtain of bubbles.

1.2.3 Deployment Procedure - Double Bubble Curtain (DBC)

An area in the South Compound has been allocated as the location of the Double Bubble Curtain (DBC) compressor storage area. This area will contain 10 PTS 1600cfm compressors complete with two manifolds and compressor hoses which will provide compressed air to the Double Bubble Curtain Hoses (DBCH).

DUK have procured 2 x 850m bubble curtain hoses from Hydrotechnik, Lubeck. The hoses will run from the compressor area in the South Compound to approximately CH300 on the North Break Water and also to the South covering the South Breakwater areas, detailed in Figure 1.2 below.

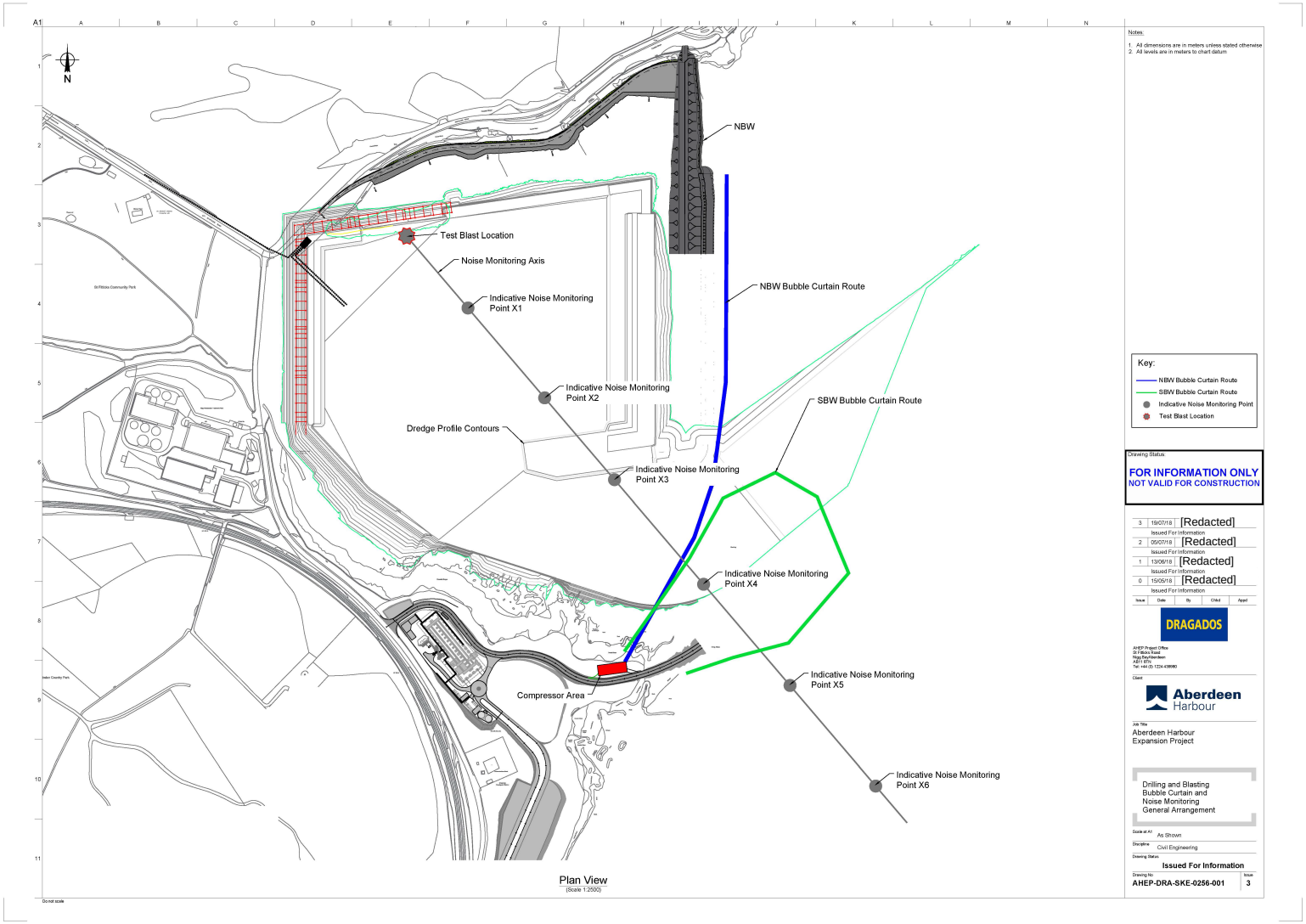

Figure 1.2 - Layout Location of Bubble Curtain

The small red area in Figure 1.2 is the Compressor storage area. The blue line illustrates the layout for the hose running from the Compressor area to the North Breakwater and the green line depicts the route of the hose when blasting is to occur in the South Break Water area.

It should be noted that both configurations will make use of a double bubble curtain and each will be separated by approx. 15m. This separation is determined by the average depth of water along the transect of the DBC

Based on the AHEP programme, early blasting operations will focus on the NE area of Nigg Bay. As such, test blasting will be carried out in this area, behind the partially completed breakwater and double bubble curtain. During the test blasting, underwater noise will be measured along a transect that has a direct line of sight to the blasting location, i.e. it is not impeded by the partially constructed northern breakwater.

The majority of blasting in the northern breakwater area will occur behind the blue line double bubble curtain (from Compressor area to the North Breakwater), and then the green line bubble curtain, as the works progress to the far eastern end of the southern rock blasting zone. The southern breakwater area requires considerable dredging of overburden before any blasting of any description can occur. It should also be noted that the blasting of the southern trench areas is at a depth - 17mCD and this in itself would act as a attenuation factor.

1.3 Bubble Curtain Effectiveness Tests (within combined PAM mitigation)

1.3.1 Acoustic Modelling & Locations

The indicative points for testing the bubble curtain effectiveness are presented in Figure 1.2 above. These include x3 UWN testing points inside the DBC (X1-X3) and x3 UWN testing points outside the DBC (X4-X6).

Previous experience of making acoustic recordings at sea indicates that successive measurements of sound pressure level at the same location are, more than likely, going to yield different sound pressure levels. The difference between each measurement is attributed to natural variation in the environment which subsequently affects acoustic propagation. Measurements made over a number of distances will give a sense of the variation likely to arise. Measurements made at just one location will not provide any indication of the inherent variability. Three measurements are considered an adequate number to provide a sense of the variability in sound pressure level.

1.3.2 Combined PAM and UWN Monitoring (PAM boat coverage and UWN testing points)

Two boats will be used during the DBC effective tests and the initial blast tests.

As described in Section 1.6.2, the hydrophones are capable of detecting harbour porpoise at a range of 300-400m and bottlenose dolphin at 1,000m. The locations of the two boat-based PAM hydrophones are designed to cover the necessary 1km mitigation for both species when blasting occurs in the north of the bay – this is shown on. Figure 1.3. An additional figure showing the hydrophone set-up for blasting in the south of the bay will be provided to MS-LOT for approval at least 2 weeks prior to blasting taking place in the south of the bay.

The PAM hydrophones will be deployed for one hour prior to a blast. Once there have been no marine mammals in the mitigation zone for a period of 30 minutes before the blast time, the PAM operator will give the ‘green light’ to the blast operator, who will detonate the blast. Immediately prior to the blast, the two monitoring vessels will move to the UWN monitoring locations (i.e. X1-6 as shown on Figure 1.2 and Figure 1.3), in accordance with the schedule set out in Table 1.

Blasting will not take place in a Beaufort Sea State greater than 3 (unless agreed otherwise with MS-LOT) due to the efficacy of the MMO and PAM mitigation measures.

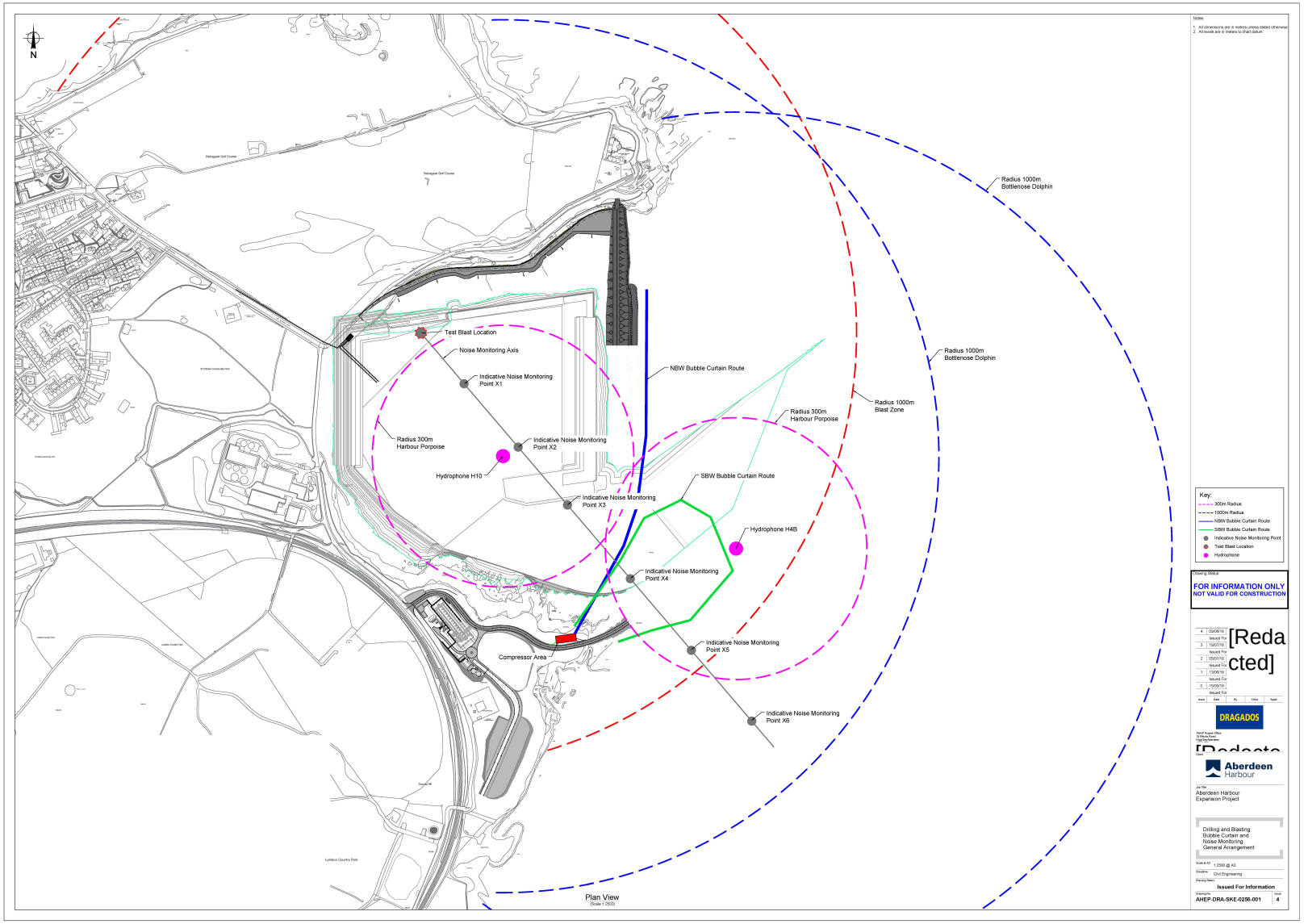

Figure 1.3 - PAM and Bubble Curtain Effectiveness Tests

The total number of test blasting days, boats, PAM mitigation zones and stations, UWN testing points and DBC interactions are summarised and ordered in Table 1. The first blast on day 1 will be a reduced charge size of 10 kg and all other blasts will be 20kg. If adverse effects on marine mammals are observed by the MMOs, MS-LOT will be notified immediately.

Table 1 – PAM and UWN Monitoring (summary and order of zones, points and testing)

Day	Boat A	Mitigation Zone	UWN Testing Point	Boat B	Mitigation Zone	UWN Testing Point	Bubble Curtain Effect
Day 1	Blast 1	A (x4 stations)	X1	Blast 1	B (x4 stations)	X4	Yes
	Blast 2	A (x4 stations)	X1	Blast 2	B (x4 stations)	X5	Yes
Day 2	Blast 1	A (x4 stations)	X1	Blast 1	B (x4 stations)	X6	Yes
	Blast 2	A (x4 stations)	X2	Blast 2	B (x4 stations)	X4	Yes
Day 3	Blast 1	A (x4 stations)	X2	Blast 1	B (x4 stations)	X5	Yes
	Blast 2	A (x4 stations)	X2	Blast 2	B (x4 stations)	X6	Yes
Day 4	Blast 1	A (x4 stations)	X3	Blast 1	B (x4 stations)	X4	Yes
	Blast 2	A (x4 stations)	X3	Blast 2	B (x4 stations)	X5	Yes
Day 5	Blast 1	A (x4 stations)	X3	Blast 1	B (x4 stations)	X6	Yes
	Blast 2	A (x4 stations)	X1	Blast 2	B (x4 stations)	X4	Yes
Day 6	Blast 1	A (x4 stations)	X1	Blast 1	B (x4 stations)	X5	Yes
	Blast 2	A (x4 stations)	X1	Blast 2	B (x4 stations)	X6	Yes

Note: the first blast on Day 1 will be 10kg. All other blasts will be 20 kg.

1.4 Procedures - Bubble Curtain Effectiveness (6 days of test blasting)

The following procedures will be followed for the UWN monitoring and testing of the DBC:

1.4.1 Setup (Test Blasting)

- Indicative locations between the blast site and the bubble curtain have been identified for monitoring (X1 to X2 and X3 from Boat A). The exact locations of the monitoring points will be determined and recorded using a boat-based GPS at the time of measurement.
- An estimation of the likely sound levels in the water on the inside of the bubble curtain (X1, X2 and X3) will be made. There is the possibility that if the hydrophone is placed too close to the blast site, the outgoing pressure wave is of such a magnitude that it will be saturated resulting in time-domain waveforms being clipped. If necessary, a consideration will be made to revising the location or else altering gain settings or swapping out the hydrophone for one of a different sensitivity e.g. D/70 (**H0**) (-20) for **H10** (-40). **H10** (-40) for example has been designed, built and tested to cope with a peak amplitude of up to 240dB.
- Indicative locations on the seaward side of the bubble curtain for the second recording location have been identified also. It is proposed to monitor underwater noise levels mid water at a range of distances from the point of the blast (X4, X5 and X6), approximately 1000m, 1250m and 1500m.
- Neither temperature nor tidal state are model dependencies for the blast propagation model used for the AHEP Environmental Statement (Technical Appendix 13-B), i.e. there is no allowance for such fluctuations in sound speed in the model. Regardless, sea temperature does not fluctuate sufficiently day-to-day to an extent that would affect noise propagation. In relation to tidal state, over the six days of test blasting, noise measurements will be taken at varying states of the tidal cycle, including at high tide when sound propagation is likely to be greater.
- For monitoring and testing specially-designed/calibrated hydrophones (engineered by Chickerell Bioacoustics), terminal/processing units (engineered by Chickerell Bioacoustics) and manual PCM audio recorders will be used to listen/record animal detections and then process and record the proposed explosives work. The PCM audio recorders will record files in .wav file format and the internal SD cards will be examined using CoolEdit (to quality check the data + extract sequences for further analysis) then MATLAB (to perform measurements on the data). In this work a mix of bespoke hydrophone configurations will be used and deployed from x2 boats (blast and seaward sides).
- For near field sounds (inside the DBC) the Chickerell Bioacoustics **H10** (-40), or the Neptune D70 **H0** (-20) will be used (as required). For far field sounds (outside the DBC) the Teledyne Reson TC4032-1 **H4B** will be used. For any ambient sounds the Neptune D70 **H4** will be used.
- Refer to Appendix A and B for specification sheets and testing/calibration certificates for each of these

hydrophones. Also note H10 does not have a specification sheet as it was designed and built in-house.

- Refer to Appendix C for copies of full operational procedures documents, also for the hydrophone recording forms that will be completed in full for each measurement taken.

1.4.2 Implementation (Test Blasting)

- For this work the hydrophones will be deployed at the same depth as the sound source or mid water (as appropriate) for the measurements being made. The units will be deployed vertically over the side of each boat (as required). Heavy lead weights will be fixed to each cable to ensure they are held vertically (always) in the strong tidal cycles / currents. They will also be deployed in such a way that there will be no danger of entanglement either with the deploying boat's propeller, other structures, or seabed.
- For safety reasons the deployments will also configured to allow for boat mobilisation and / or quick recovery. During blasting operations and during recording events the boat engines will be switched off (where possible) to avoid contamination of the sound recordings with engine noise.
- The Blast Contractor will activate the initial test blasts (using a 20kg charge weight apart from the first blast which will be 10 kg) for a period of 6 days, with 2 blasts per day, i.e. approximately 2 measurements will be made from each of the locations X1 – X6, and 24 measurements in total. If the acoustic technician feels the data gathered is insufficient further tests may need to be carried out; however, additional blasting past day 6 will not be carried out without the agreement of MS-LOT.
- Recordings will be made when the bubble curtain is on. Once the blast has taken place and the acoustic technicians have collected high quality data, the curtain will be turned off and each boat will bring the hydrophones aboard.
- The procedure will then be repeated at the remaining locations during the 6 days of test blasting.
- During implementation each acoustic technician will check the hydrophone output using the PCM recorder playback function and if required the CoolEdit software (quality check the data + extract sequences for further analysis).

- If the test blast noise exceeds the 170dB dB re 1uPA rms (183 dB re 1 uPa peak equivalent)[1] at a distance of 400 m from the blast site (or the calculated equivalent using a using a propagation loss model), which is the level predicted by the underwater noise modelling undertaken for the AHEP Environmental Statement,, the test blasting will stop and MS-LOT will be notified as per the Drilling & Blasting Methodology-Environmental Controls Marine Mammals. The blasting and monitoring will be revaluated.

1.4.3 Verify Modelling Outputs (Test blasting)

- As the key purpose of the test blasting is to verify the modelling outputs undertaken for the AHEP Environmental Statement, in terms of predicted noise levels at varying distances, it is not necessary to use smaller charge sizes during the testing phase, although the first blast on day 1 will be of a reduced size of 10 kg.
- It is not necessary for all locations to be tested for each blast; only that for each blast, a sound measurement is taken within and outwith the bubble curtain. The level of resource and effort required to achieve simultaneous monitoring (i.e. 6 boats, crews and hydrophones) would be significant.

1.5 Procedures – Ongoing Blasting Monitoring

1.5.1 Combined PAM and UWN Monitoring Points

After the test blasting phase, during the on-going blasting PAM monitoring will continue in accordance with the procedure set out above unless agreed otherwise with MS-LOT.

After the test blasting, ad-hoc UWN measurements will be taken at various locations and the main objective will be to record the wider construction noises (i.e. dredging, rock placement, drilling, rotary piling, blasting, passing ships, and ambient conditions if available).

The indicative PAM listening stations are fixed, however the UWN points are likely to change as construction progresses and as blasting moves from north to south for example.

[1] See Appendix D for further description of rms versus peak sound levels

Also, it is considered that as the project progresses, and the northern breakwater extends further from north to south, that the harbour entrance and channel out to open water will be the main focus point for PAM mitigation and control.

PAM will be used prior to marine drilling if activities are to commence during the hours of darkness. If drilling is continuing from daylight hours, without a break, then there should be no need to use PAM. If measurements of noise generated from drilling occur at a level unlikely to cause significant disturbance, it may be possible to reduce this mitigation. This data will be provided in the UWN Monthly reports.

Note no Rotary Piling will take place in the marine environment.

1.5.2 Setup (On-going blasting)

- UWN monitoring will be undertaken at various locations in the inner harbour and outer bay.
- The main objective is to record general construction noises and ambient conditions (if available).
- The measurement points are likely to change as the construction programme progresses.
- For monitoring and testing specially-designed/calibrated hydrophones (engineered by Chickerell Bioacoustics), terminal/processing units (engineered by Chickerell Bioacoustics) and manual PCM audio recorders will be used to listen/record animal detections and then process and record the construction noises (inc. explosives work). The PCM audio recorders will record files in .wav file format and the internal SD cards will be examined using CoolEdit (to quality check the data + extract sequences for further analysis) then MATLAB (to perform measurements on the data). In this work a mix of bespoke hydrophone configurations will be used and deployed from a single boat (blast and seaward sides).
- For near field sounds (50-100m closest) the Chickerell Bioacoustics **H10** (-40), or the Neptune D70 **H0** (-20) will be used (as required). For far field sounds (100-500m furthest) the Teledyne Reson TC4032-1 **H4B** will be used. For any ambient recordings the Neptune D70 **H4** will be used.
- Refer to Appendix A and B for specification sheets and testing/calibration certificates for each of these hydrophones. Also note H10 does not have a specification sheet as it was designed and built in-house.
- Refer to Appendix C for copies of our full operational procedures documents, also for the hydrophone recording forms that will be completed in full for each measurement taken.

1.5.3 Implementation (On-going blasting)

- For this work the hydrophones will be deployed at the same depth as the sound source or mid water (as appropriate) for the measurements being made. The units will be deployed vertically over the side of each boat (as required). Heavy lead weights will be fixed to each cable to ensure they are held vertically (always) in the strong tidal cycles / currents. They will also be deployed in such a way that there will be no danger of entanglement either with the deploying boat's propeller, other structures, or seabed.
- For safety reasons the deployments will also configured to allow for boat mobilisation and / or quick recovery. During blasting operations and during recording events the boat engines will be switched off (where possible) to avoid contamination of the sound recordings with engine noise.
- A wide range of construction noises will be recorded and detailed notes will be taken (inc. blasting)
- For general construction noises the recordings will be made when the bubble curtain is off (to avoid interference). When the acoustic technicians have collected high quality data, the curtain will be turned back on and each boat will bring the hydrophones aboard.
  During implementation each acoustic technician will check the hydrophone output using the PCM recorder playback function and if required the CoolEdit software (quality check the data + extract sequences for further analysis).

1.6 Instrumentation (UWN and PAM combined, switchable gains & single unit systems)

This section describes the equipment that will be used for each of the key UWN scopes of work, and includes Low and High level Sound Sources and existing acoustic environment noise and detection of marine mammals.

Refer to Appendix A and B for specification sheets and testing/calibration certificates for each hydrophone that forms our overall system. Also note H10 does not have a specification sheet as it was designed and built in-house.

1.6.1 Far-Field (Low-Level) Underwater Sound Sources + Detections (H4B)

The calibrated Teledyne RESON Hydrophone (TC4032-1) (**H4B**) (cabled by Chickerell Bioacoustics) with integral preamplifier (IP) and terminal unit (TU) will be used to characterise underwater ambient noise and low-level sounds from a variety of sources. This hydrophone system has been designed for deployment from a boat but can be used from a structure with suitable modification to the deployment system. The dry end TU will provide pre-set gain and drivers for a recorder, laptop and headphones. The whole system will be powered from an external 12 Volt battery.

Wet End

The wet end will be the calibrated TC4032 (**H4B**) hydrophone. This hydrophone and preamplifier has a nominal sensitivity of -164dB re 1V/µPa when used in differential output mode, i.e. a Sound Pressure Level (SPL) of +164dB re 1µPa at the hydrophone would produce 1 Volt RMS output from the hydrophone. The first resonance is at 55 kHz giving a flat response (+/-2 dB) to 40 KHz but is usable to 120 kHz. The maximum output level is 6 V RMS in differential mode and the unit will overload at an SPL of 179.5 dB re 1 µPa.

The unit assembly is shown in Figure 1.4 and the electrical diagram is shown in Figure 1.5.

Figure 1.4. RESON TC4032-1 Hydrophone Assembly

Electrical Diagram

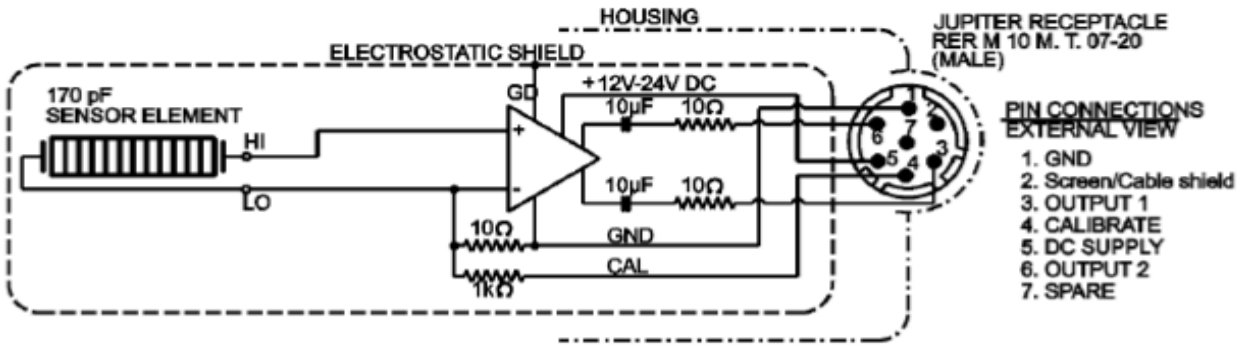

Figure 1.5. Electrical Diagram of the RESON TC4032 hydrophone assembly

The TC4032 (H4B) includes a tone injection facility whereby a tone is injected in series with the ceramic element. This will be used to give confidence that the whole processing chain is functional.

The estimated calibration factor for the TC4032 (**H4B**) wet end system is 164 dB re 1µPa/V.

This hydrophone has been fully tested and calibrated by Neptune Sonar (July 2018). Refer to Appendix B for testing/calibration certificates.

Dry End
The dry end TU (engineered by Chickerell Bioacoustics) will be housed in a grey polycarbonate box, as shown in Figures 1.6 and 1.7.

Figure 1.6. Front of Terminal Unit

Figure 1.7. Rear of Terminal Unit

The TU will provide all necessary gain and filter stages. The input stage will be a high-speed differential amplifier with the gain set by internal link to be 0/+10/+20dB. For normal use the link will be set to 10dB. Note that this additional 10 dB gain will reduce the overload threshold for the system from the 179.5 dB re 1µPa at the hydrophone output to 169.5 dB re 1µPa.

This TU has been fully tested and used during the calibrations by Neptune Sonar (July 2018). Refer to Appendix B for testing/calibration certificates.

1.6.2 Near-Field (Loud) Underwater Sound Sources + Detections

Calibrated Chickerell Bioacoustics (**H10**) and Neptune D/70 (**H0**) ball hydrophones (housed and cabled by Chickerell Bioacoustics) with an IP and TU (engineered by Chickerell Bioacoustics) will be used to characterise loud underwater sounds (close-in to source). The aim of using these hydrophones will be to record the waveform in the near field, while using the TC4032-1 to record the far field signal.

It should also be noted that the near-field hydrophone unit (**H10**) has been designed/optimised for monitoring the explosives work / loud sound levels and can measure sound levels up to 240 dB re 1uPa. It uses an omni-directional ball hydrophone with characteristics similar to a Neptune D/140. By changing one switch setting it can also be switched to a high gain mode and is capable of picking up echolocation click from harbour porpoise and other odontocetes. The electronics have a flat response from 100 Hz to over 200 kHz, so the overall system response is determined solely by the hydrophone. With a resonance at 140 kHz it is optimised to pick up the clicks from harbour porpoise.

These hydrophone units will use very low gain settings and high dynamic range preamplifiers. The dry end TU will provide pre-set gain and drivers for the acoustic recorder, laptop and headphones. The whole system will be

powered from an external 12 Volt battery.

Wet End

The wet ends have designated P67 and will use Chickerell Bioacoustics (**H10**) and Neptune (**H0**) ball hydrophones. The IP input stage will have gain settings of -40dB, -20 dB,0dB and +26dB selectable by switching the power supply to the preamplifier. The differential line driver will have a gain of 6 db.

The D/70 (**H0**) hydrophone has a nominal sensitivity of -198dB re 1V/µPa, i.e. a Sound Pressure Level (SPL) of +198dB at the hydrophone would produce 1 Volt RMS output from the hydrophone. When the gain is set to 0dB the maximum signal at the preamplifier output before clipping is 6 Volts RMS corresponding to an SPL on the hydrophone of 207.6dB re 1uPa. If the input stage is set to a gain of -20 dB the overall wet-end gain is -14 dB and the maximum SPL it will handle is 227.6 dB re 1 uPa. The 20dB attenuation occurs before the first active stage to maximise dynamic range and this is achieved by using a compensated resistive divider.

The estimated calibration factors for the D/70 (**H0**) wet end system are:
Gain set to 0dB: -192 dB re 1V/uPa
Gain set to -20 dB: -212 dB re 1V/uPa

In the low gain setting for **H10** the estimated gain factors are:

Gain of hydrophone -206 dB re 1 Volt/uPa
Gain of preamplifier -20 dB
Giving a Calibration factor of -226 dB re 1 Volt/uPa

The highest output signal level from the preamplifier is 20 Volts peak, a level of +23 dB re 1 Volt. This means the maximum input signal level the wet-end unit can pass without clipping is 249 dB re 1 uPa.

In the high gain setting for **H10** the estimated gain factors are:
Gain of hydrophone -206 dB re 1 Volt/uPa
Gain of preamplifier +26 dB
Giving a calibration factor of -180 dB re 1µPa/V.

The highest signal level that the system can handle when set to high gain is then 203 dB re 1 uPa. Over the range 1-20 kHz the noise spectral level is 4.5 nV in a 1 Hz bandwidth.

These hydrophones have been fully tested and calibrated by Neptune Sonar (July 2018). Refer to Appendix B for testing/calibration certificates.

The calibration results also show that all hydrophones are in line with previous work, well within any experimental design errors, are capable of detecting the target species (inc. harbour porpoise and bottlenose dolphin) and are suitable for mitigating and then measuring the blasting and construction works proposed and ongoing.

Dry End

The dry end TU (engineered by Chickerell Bioacoustics) will be housed in a grey polycarbonate box as shown in Figures 1.8 and 1.9.

Figure 1.8. Front of Terminal Unit

Figure 1.9. Rear of Terminal Unit

For H0 the TU will provide all necessary gain and filter stages. The input stage will be a high-speed differential amplifier with the gain set by internal link to be 0, -20dB. For normal use the link will be set to 0dB.

For H10 the input stage is a high-speed differential amplifier with gain that can be set to 0/+10/+20dB. When the system is used in the low-gain mode the input stage gain should be set to 0 dB but when used in the high-gain mode it should be set to +20 dB. The +10 dB setting can be used in the high-gain mode when there are high levels of ambient noise or in the low-gain mode when the sound source level is lower.

A variable gain amplifier follows the input stage and allows additional gains of 0/10/20/30 dB.

These TUs have been fully tested and used during the calibrations by Neptune Sonar (July 2018). Refer to Appendix B for testing/calibration certificates.

1.6.3 Existing Acoustic Environment

The calibrated Neptune D/70 (**Ambient**) ball hydrophone or Teledyne RESON Hydrophone (TC4032-1) (**H4B**) (housed and cabled by Chickerell Bioacoustics) with an IP and TU (housed in a waterproof box and engineered by Chickerell Bioacoustics) will be used to characterise the existing acoustic environment. Monitoring will be 1 or 2 times a month. A report will be completed each month of the findings and issued to SNH/MS-LOT & WDC. as detailed in Table 3 section 1.12.

The hydrophone will be deployed off a suitable structure and/or platform and/or directly from the PAM/UWN monitoring boat. If from a structure and/or platform a long rod will be used to hold it off any structure. If from the boat it will be deployed from a stationary/anchored boat (with engine and echosounder off) and power be provided by a 12 Volt battery.

All data will be recorded using a Wildlife Acoustic Recorder (SM2) or PCM Recorder and a series of SD cards. Measurements will be taken at these points to ensure all noise sources are captured at various times during a 24

hr period.

The D70 (**Ambient**) unit assembly (excluding the Wildlife Acoustic Recorder (SM2) is shown in Figure 1.10.

These hydrophones have been fully tested and calibrated by Neptune Sonar (July 2018). Refer to Appendix B for testing/calibration certificates.

Also the proposed TUs (described as H4B, HSS and/or Ambient) have also been fully tested and used during the calibrations by Neptune Sonar (July 2018). Refer to Appendix B for testing/calibration certificates.

Figure 1.10. Typical Assembly (Structure/Platform/Boat Deployed)

The calibration results also show that all hydrophones are in line with previous work, well within any experimental design errors, are capable of detecting the target species (inc. harbour porpoise and bottlenose dolphin) and are suitable for mitigating and then measuring the blasting and construction works proposed and ongoing.

1.6.4 Acoustic Recorders and Sampling Frequencies

For the boat and land-based work suitable PCM acoustic recorders will be connected to the TU boxes via the 1/4" jacks on the rear panels. The 'Line Input' sockets on the recorders will be used and the recorder inputs will be set to 'Line' on the recorder menus. The recorder sampling rates will be set to 48 kHz with 24-bit sampling as the default settings. The optional high-pass or low-pass filters within the recorders will also be de-selected.

The acoustic recorders to be used are illustrated in Figure 1.11.

Figure 1.11. PCM Acoustic Recorder Recorders

We record the linear time series after signal amplification and some limited filtering. A recording of say 10 seconds

sampled at 96 kHz will provide 960,000 samples. MATLAB is then used to handle this data and this works using matrices. It should also be noted that spectral processing is not overly useful with short duration impulses such as explosives.

1.7 Animal Detections, Vessel(s) and Performance

1.7.1 Animal Detections, Click Detectors and Predicting Ranges

Any animals observed / detected during the noise testing and monitoring will be noted and logged. A click detector will also form part of the hydrophone deployments and where possible this will be correlated to any noises recorded during the underwater noise surveys.

It is expected that a detection ranges between 300 and 400m would be achievable for harbour porpoise (especially with the H10 configuration.

For cetacean detection, the terminal/processing units to be used in this work will include echolocation click detectors. These will be optimised to detect clicks from cetaceans, which will translate the sounds down to the bandwidth that can be sampled at 48 kHz. This technique has been successfully used on other Ecofish Global (EFG) projects and has detected clicks from a variety of species.

1.7.2 Vessel, Navigation and Plotting

DUK will provide spec of x2 boats and navigation etc (Clachan Marine). x2 boats will be required for the PAM and Bubble Curtain Effectiveness Tests. Once the blast testing scope of works is complete, x1 boat will be required for ongoing PAM (daily) and UWN (monthly).

1.7.3 Mitigation and Control

The outlined PAM system and vessels will be used, as well as x2 MMOs, situated on each headland for blasting operations to ensure the 1km mitigation zone is clear of harbour porpoise, dolphins and other marine mammals, prior to start-up of the operations.

PAM will provide information on available tonal calls/vocalising marine mammals within the mitigation zone that are not visible to MMOs. The boat-based PAM configurations will cover the 1km mitigation zone (direct line of sight) for blasting, as a minimum. The MMO watches will encompass a radius from their location on the Headlands.

All hydrophones and Tus proposed have been fully tested and calibrated by Neptune Sonar (July 2018). Refer to Appendix B for testing/calibration certificates.

The calibration results also show that all hydrophones and terminal units are in line with previous work, well within any experimental design errors, are capable of detecting the target species (inc. harbour porpoise and bottlenose dolphin) and are suitable for mitigating and then measuring the blasting and construction works proposed and ongoing.

1.7.4 - Previous Work and Performance

It should also be noted that these systems have been used extensively elsewhere and both the D/70 and TC4032-1 hydrophones have repeatedly detected echolocation clicks from bottlenose dolphins and common dolphins in previous deployments (areas dominated by these species).

On the Nigg South Quayside Project (Global Energy) in 2014, EFG had hundreds, possibly thousands of detections over a 12-month period (inc. bottlenose dolphin, grey seal, harbour porpoise and minke whale). EFG also reported UWN monitoring results to MS-LOT on a monthly basis and completed this work order successfully. The data that was obtained during this work is considered to be one of the largest datasets for UWN in shallow estuarine coastal waters in the world. This data was also submitted as a pack to MS-LOT and uploaded to the National Archive for Underwater Acoustics at the time.

An example of species that were observed, detected and mapped for movement and distribution during this work is presented in Figures 1.12 to 1.15.

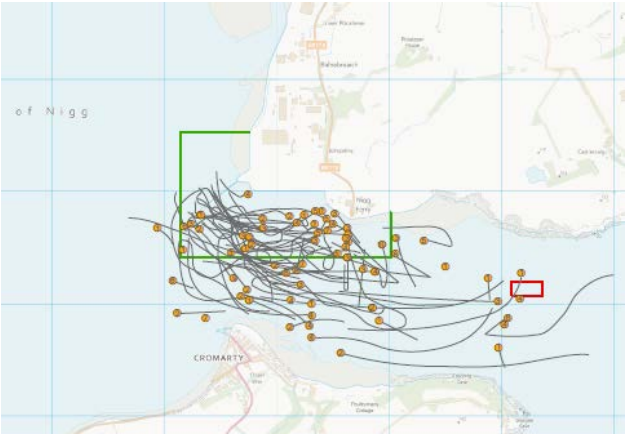

Figure 1.12 - Bottlenose Dolphin

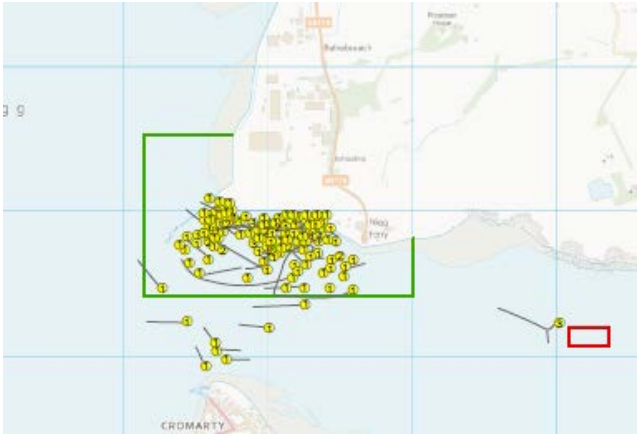

Figure 1.34 - Grey Seal

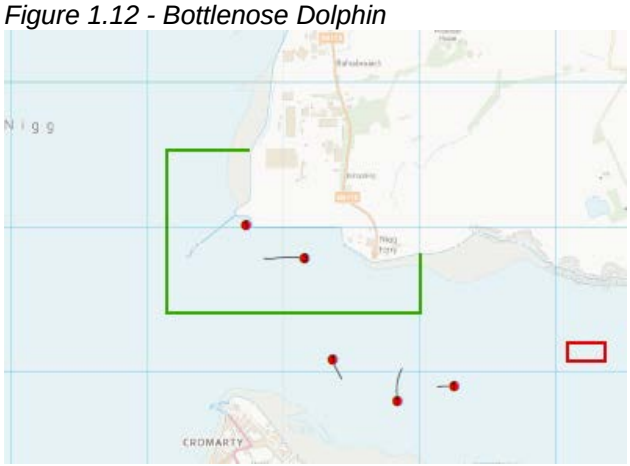

Figure 1.14 - Harbour Porpoise

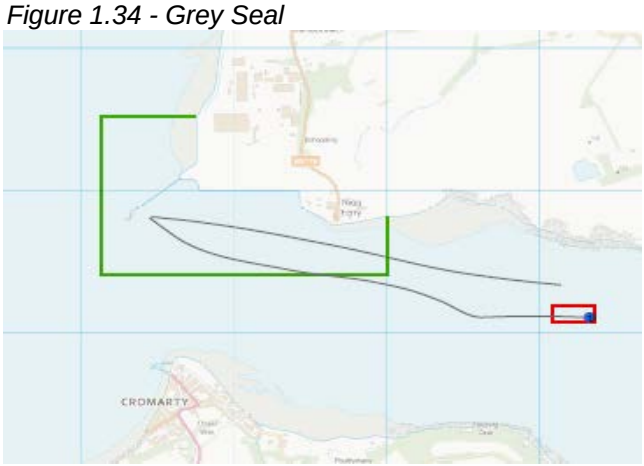

Figure 1.15 - Minke Whale

For further details on this project see http://www.ecofishglobal.co.uk/project/eiamitigation-nigg-south-quayside/

More recently (2017 into 2018) EFG carried out underwater noise monitoring during piling works at the Kyleakin Feed Mill on the Isle of Skye. The new Kyleakin Feed Mill is situated off the A87 across the Skye Bridge (in the old quarry at Kyleakin). The scope of the marine works included demolition (of the existing pier reinforced concrete deck), steel sheet piling (vibro and impact), dredging (platform, barge, excavators and dumpers), caisson foundations, infill works, associated concrete slabs, drainage works, services and electrical works.

Data collected was then analysed by our marine bio-acousticians who could provide a fascinating insight into the levels of underwater noise generated and also the ambient noise associated with this complex site (including passing ships, animal noises (notably bottlenose dolphin) etc.

For further details on this project see http://www.ecofishglobal.co.uk/project/underwater-noise-monitoring-kyleakin/

1.8 Measurements, Data Analysis and Quality Assurance

The level of noise in the water can vary over a very wide range. The level of noise will be described using Sound Pressure Level (SPL) and the usual units are micro Pascals. Because of the very large range it is normal to use a logarithmic ratio of level expressed in decibels (dB). The level in dB is given by:

$$\mathrm{SPL}(\mathrm{dB}) = 20 \times \mathrm{Log}_{10}\left(\frac{\text{Pressure}}{\text{Reference}}\right)$$

In underwater acoustics the reference pressure is always 1 μPa so SPL is expressed as dB re 1μPa.

Typical wideband SPL's vary from around 60 dB re 1µPa in very quiet conditions, up to >220 dB re 1µPa close to an impact pile driver (a range of 180 dB). Most measuring systems are limited to a dynamic range of around 90 dB, so it is necessary to use a range of hydrophones when characterising underwater sound sources.

EFG have a range of measuring hydrophones available to characterise sound sources and a few of the have already been covered above. Within this section the methodology employed to analyse the collected acoustic data is detailed.

1.8.1 Far-Field (Low-Level) Underwater Sound Sources

Characterising low level sound sources requires a hydrophone with moderate gain and good noise performance. For these measurements the calibrated TC4032-1 (**H4B**) hydrophone configuration will be used. Calibration tones will be injected at the start of a recording to overcome the lack of calibration in the PCM acoustic recorders.

When analysing each recording the calibration tones will be identified and measured by the analysis system, so that absolute levels could be assigned to the measured data.

Data recorded will be archived onto a large networked hard disk for further analysis. CoolEdit software will then be used to carry out quality checks and to determine which sections of the data were suitable for further analysis. If necessary sections of the data will be extracted into smaller files to speed up the analysis.

The chosen data will then be passed to the MATLAB processing software, where routines will be specially written for this work, and data processed (as required) for each task.

1.8.2 Near-Field (Loud) Underwater Sound Sources

The processing of the recorded data will be the same as for the low-level sound sources. With CoolEdit being used to quality check the data and extract sequences for more detailed analysis and then MATLAB used to perform measurements on the data.

1.8.3 Existing Acoustic Environment

Acoustic environments can be characterised in two ways. Spot measurements can be made using the D/70 (**Ambient**) or TC4032-1 (**H4B**) configuration (as described above). However, it is also useful to make longer term measurements to allow a more detailed characterisation of the acoustic environment. Such measurements usually last for days rather than minutes and EFG routinely employ the fixed Neptune D/70 (**Ambient**) configuration to carry out this task (from suitable structure, platform or boat).

Individual files are inspected using the CoolEdit software and interesting sounds identified and extracted for further analysis by the MATLAB software. Specific MATLAB routines are used to display interesting events, e.g. passing ships, and to display the whole recording sequence as a spectrogram and a variability plot.

1.8.4 Animal Detections

Any animals observed / detected during the noise monitoring will be noted and logged. A click detector will also form part of the static hydrophone deployment and where possible these will be correlated to any noises recorded during the underwater noise surveys.

The PAM system (using a Neptune D/70 ball hydrophone) will be deployed and connected to terminal/processing units (engineered and preamplified by Chickerell Bioacoustics), then connected to a PC (laptop) with ISHMAEL bioacoustic analysis software installed and displaying sound waveforms and spectrograms. This configuration will have recording capability for real-time sound input, acoustic localisation, beamforming, automatic call recognition, and a sound annotation facility.

1.8.5 Testing and Calibration Certifications

All hydrophones and TUs proposed have been fully tested and calibrated by Neptune Sonar (July 2018). Refer to Appendix B for testing/calibration certificates.

This testing facility operates to the standards set by the National Physics Laboratory (NPL), and all work was done under a controlled testing facility.

The calibration results also show that all hydrophones and terminal units are in line with previous work, well within any experimental design errors, are capable of detecting the target species (inc. harbour porpoise and bottlenose dolphin) and are suitable for mitigating and then measuring the blasting and construction works proposed and ongoing.

1.8.6 Personnel and Quality Assurance

The Lead PAM Operator will remain in constant communication with the acoustic technicians, MMOs and the blasting manager. The Lead PAM Operator will be responsible for mitigation control across the site and will instruct the blast manager to delay operations until the acoustic/PAM/MMO mitigation team is satisfied that all marine mammals are out of the mitigation zone and that mitigation protocols have been adhered to. All start and stop times will be recorded, as well as, operational and technical down time.

During the blast efficiency testing acoustic technicians from x2 boats will provide PAM (pre-charge) and record underwater noise (during blasting events). The Lead PAM Operator will be stationed on one of these boats and/or within the shoreline PAMBASE.

The Lead PAM Operator will be experienced and dedicated to the task of operating the specific PAM equipment.

The Lead Bioacousician will also be present on site at the start of equipment testing and will ensure quality assurance, proper set up and will troubleshoot any technical glitches or queries that may arise (pre monitoring and testing).

1.9 Reporting, Compliance and Predicted Model Validation (UWN)

Underwater noise monitoring reports will be produced when underwater noise monitoring is ongoing and will contain the following information:

- Frequency representation in third octave bands (frequency domain - PSD distribution with variability).
- Temporal variance in frequency content (time domain - spectrogram).
- Received levels at recording location.
- Estimated source level of activity (detail method of calculation).
- Log of recordings together with ancillary data (including weather).

UWN monitoring data will be provided to MS-LOT and SNH daily during the test blasting. In addition, a report illustrating the underwater noise levels at agreed distances from the source, MMO and PAM records, and the location and depth of test blasts, will be submitted within 2 working days after the 6 days of test blasting have occurred.

Within the first 2 days of test blasting activities a site visit will be held for MS, SNH and WDC to demonstrate the marine mammal mitigation and measuring systems deployed at AHEP (PAM, DBC, MMOs etc.).

Unless otherwise approved by MS-LOT, no more than 20kg charges will be used. Once blasting has commenced and underwater noise monitoring data is available, on the sound levels generated by blasting behind a bubble curtain, DUK may seek to amend the charge size in consultation with MS-LOT, SNH and WDC.

Staged reports will be prepared and submitted for; (1) bubble curtain effectiveness tests; and (2) UWN monitoring (interim/monthly); and (3) UWN monitoring (final).

The final report will consider the predicted noise levels described in the AHEP Environmental Statement and further information submitted in support of the HRO and ML applications. The report will describe/compare any differences between the predicted noise levels and those recorded. It will also detail any lessons learnt for future applications.

1.10 Reporting and Compliance (MMO/PAM)

For each of the activities listed above, a record of activity including watches prior to activities commencing, marine mammals observed, delays to operations commencing and any post-operation sightings will be completed. All

data will be recorded on standard JNCC template sheets for all “Effort” “Operations” and “Sightings”.

As per the Dredging Marine Licence, Marine Mammal Observer logs will be submitted to MS and JNCC as required. Logs will also be submitted to SNH and WDC as required.

Whilst activities are ongoing on site, with the potential to create underwater noise likely to disturb marine mammals, DUK are required to produce a monthly report on the mitigation measures deployed, marine mammal monitoring undertaken, and noise measurements collected, as well as a forward look to activities planned in the next month and any specific mitigations proposed. This report will include an Action Log to detail any problems encountered or issues to be raised with the regulator and provided to Marine Scotland, SNH and other interested parties. The report will also detail any exceptional circumstances where blasting has occurred, out with daylight hours, although any specific incidences will be reported to MS-LOT within 48 hours.

Reports will include:

- Completed Marine Mammal Reporting Forms;
- Date and location of the operations;
- A record of all mitigation deployed, including details of the duration of the MMO/PAM search and any occasions when activity was delayed or stopped due to presence of marine mammals;
- Details of watches made for marine mammals, including details of any sightings, details of the PAM equipment and detections, details of the sea state during the MMO and PAM mitigation period, and details of the activity during the watches;
- Any instances of ‘false negative’ readings of marine mammals, determined by analysis of the simultaneous detections made by MMOs and PAM recorders at different distances.
- Details of any problems encountered including instances of non-compliance with the agreed MMMP; and
- Any recommendations for amendment of the MMMP.

1.11 UK Noise Registry

The UK Marine Noise Registry (MNR) is a database that records the spatial and temporal distribution of impulsive noise generating activities in UK seas in order that they can be analysed to determine whether they may potentially compromise the achievement of Good Environmental Status (GES) under the Marine Strategy Framework Directive. The MNR was developed, and is maintained, JNCC on behalf of Defra and the Devolved Administrations (DAs).

DUK are required to submit data to the UK Noise Registry on planned activities and once activities are undertaken records of the actual activity. DUK must complete and submit a Close-out Report for the licensable marine activities that produced loud, low to medium frequency (10Hz-10kHz) impulsive noise in the online MNR at 6-month intervals during the validity of the licence and no later than 12 weeks from the completion of the licensable marine activity.

In line with the MNR guidance ‘noisy’ underwater activities recorded in the MNR are likely to be explosive use and any impact piling (although the latter is not planned).

Information required to be recorded in the MNR when explosives are used is listed in Table 2.

Table 2: Information required in the Marine Noise Registry

Proposed activity form	Close-out report

• Earliest start date (DD/MM/YYYY)
• Latest end date (DD/MM/YYYY)
• Expected duration of activity
  o Location
  o Latitude/longitude point (decimal degrees)
  o Latitude/longitude polygon (decimal degrees)
  o Quadrant/block
• Source properties:
  o SPL, dB re 1µPa (peak) @1m SEL, dB re 1µPa2 s (per pulse) @1m
  o Piling: maximum hammer energy (KJ)
  o Explosives: mass of TNT equivalent (kg)
	• Source properties:
	  o SPL, dB re 1µPa (peak) @1m
	  o SEL, dB re 1µPa2 s (per pulse) @1m
	  o Piling: maximum hammer energy (KJ)
	  o Explosives: mass of TNT equivalent (kg)
	• Actual location of activity
	  o Latitude/longitude point (decimal degrees)
	  o Quadrant/Block
	• Actual dates on which activity took place in correspondence with the location

1.12 Reporting Schedule

The reporting schedule provided by DUK is presented in Table 3 below. This covers document names, purpose, content, timescale, frequency, consultee, approval levels and response turnaround durations.

Table 3: Reporting schedule

Document Name	Purpose	Content	Timetable	Frequency	Consultee	Approval required or Information	Response Required & Timescale
Underwater Noise Test & Bubble Curtain Validation	Validation of Model and DBC effectiveness.	Results of 6 days of testing	After 6 days of testing	1 report of 6 days	SNH/MS-LOT/WDC	Yes	1-2 days
Increase In Blast size	Rationale for increase in Blast Size	Results from Blast Testing	6-8 days after initial tests	1 report after 6 -8 days	SNH/MS-LOT/WDC	Yes	1-2 days
Monthly Operational Blast Reports	Monthly Blast Noise Reports	Details of blasting &any issues	End of each month	1 report per month	SNH/MS-LOT/WDC	For Information	No
Ad hoc Noise Monitoring	Ambient Noise activities carried out.	Details and results of all noise generated in that month	End of each Month	1report per month	SNH/MS-LOT/WDC	For Information	No
MMO Reports (Monthly)	Details of all MMO activities	Details of all MMO observations/date/time/mitigations	End of each month	1 report per month	SNH/MS-LOT/WDC/JNCC	For Information	No
Marine Noise Registry Notification	Details of Commencement of noisy activities	Details of proposed noisy activity	7 days before start of blasting	Start of blasting	UK Noise registry	For information	No
Marine Noise Registry Close Out Report	Noise registry Close Out Report	Sources of noise/dates/times	End of Blasting	6 month intervals	UK Noise registry	For information	No

APPENDIX A - SPECIFICATION SHEETS

Chickerell Bioacoustics H10
Neptune D/70 (H0 + H4)
RESON (TC4032-1) (H4B)

Hydrophone TC4032

Low Noise Sea-State Zero Hydrophone

TC4032

- **Low noise performance**
- **High sensitivity**
- **Wide frequency range**
- **Flat frequency response**
- **Long term stability**
- **Individually calibrated**

The TC4032 general purpose hydrophone offers a high sensitivity, low noise and a flat frequency response over a wide frequency range.
The high sensitivity and acoustic characteristics makes TC4032 capable of producing absolute sound measurements and detecting even very weak signals at levels below “Sea State 0”.

The TC4032 incorporates an electrostatically shielded highly sensitive piezoelectric element connected to an integral low-noise 10dB preamplifier. The TC4032 preamplifier is capable of driving long cables of more than 1.000 meters, and the preamplifier features an insert calibration facility.
Per default the amplifier is provided with differential output. The differential output is an advantage where long cables are used in an electrically noisy environment. For use in single ended mode: Use positive output pin together with GND.
Versions with different filter characteristics are available: 4032-1 5Hz to 120 kHz, 4032-2 1Hz to 120 kHz and 4032-5 100Hz to 120 kHz.

TECHNICAL SPECIFICATIONS	
Usable Frequency range:	5Hz to120kHz
Linear Frequency range:	15Hz to 40kHz ±2dB 10Hz to 80kHz ±2.5dB
Receiving Sensitivity:	-170dB re 1V/ µPa (-164dB with differential output)
Horizontal directivity:	Omnidirectional ±2dB at 100kHz
Vertical directivity:	270° ±2dB at 15kHz
Operating depth:	600m
Survival depth:	700m
Operating temperature range:	-2°C to +55°C
Storage temperature range:	-30°C to +70°C
Weight in Air:	720g without cable
Preamplifi er gain:	10dB
Max. output voltage:	3.5Vrms at 12VDC
Supply voltage:	12 to 24VDC
High pass fi lter:	7Hz -3dB
Quiescent supply current:	≤19mA at 12VDC ≤22mA at 24VDC
Encapsulating material:	Special formulated NBR
Housing material:	Alu Bronze AlCu10Ni5Fe4

TELEDYNE RESON
Everywhereyoulook™

Hydrophone TC4032

Low Noise Sea-State Zero Hydrophone

NBR means Nitrile Rubber

The NBR rubber is first of all resistant to sea and fresh water but also resistant to oil. It is limited resistant to petrol, limited resistant to most acids and will be destroyed by base, strong acids, halogenated hydrocarbons (carbon tetrachloride, trichloroethylene), nitro hydrocarbons (nitrobenzene, aniline), phosphate ester hydraulic fluids, Ketones (MEK, acetone), Ozone and automotive brake fluid.

Documentation:

Individually calibration curves: 250 kHz
Sensitivity at ref.: frequencies: 250 kHz
Receiving sensitivity: At 5 kHz to 100 kHz
Vertical directivity: At 15 kHz
Horizontal directivity: At 100 kHz

Horizontal directivity pattern

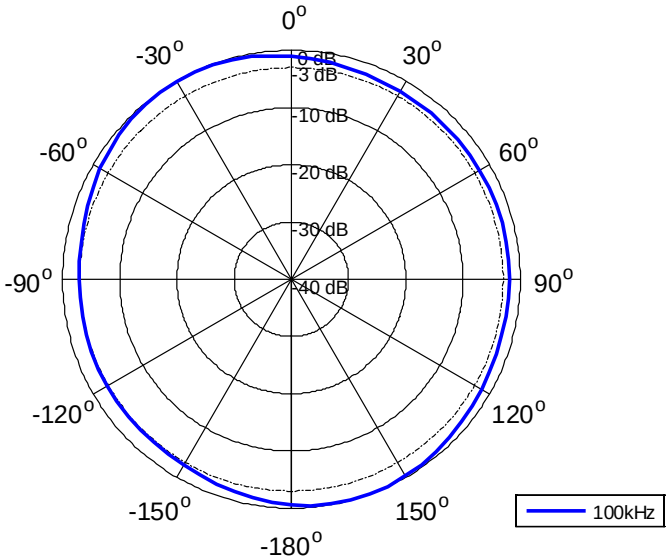

Receiving Sensitivity [dB re 1V/µPa @ 1m]

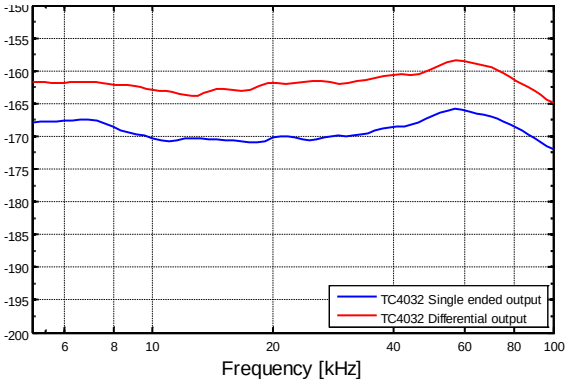

The OCR curve shown above is for single output

Vertical directivity pattern

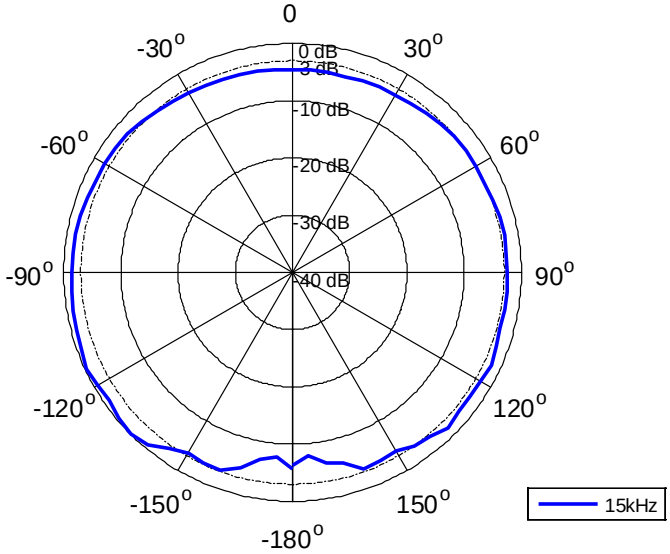

Typical equivalent noise pressure curve

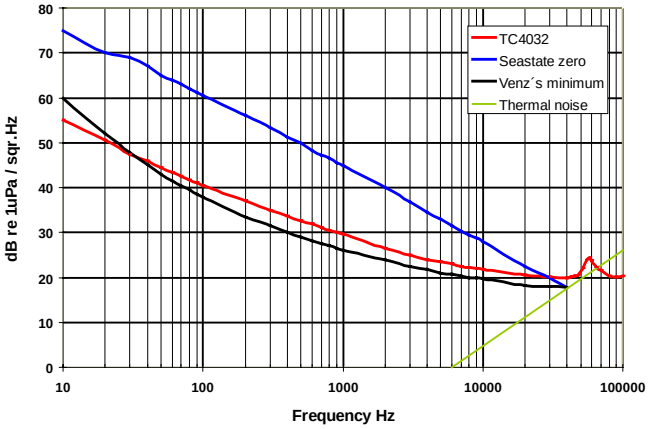

Valid for all versions of TC4032

TELEDYNE RESON
Everywhereyoulook™

Hydrophone TC4032

Low Noise Sea-State Zero Hydrophone

Outline Dimensions

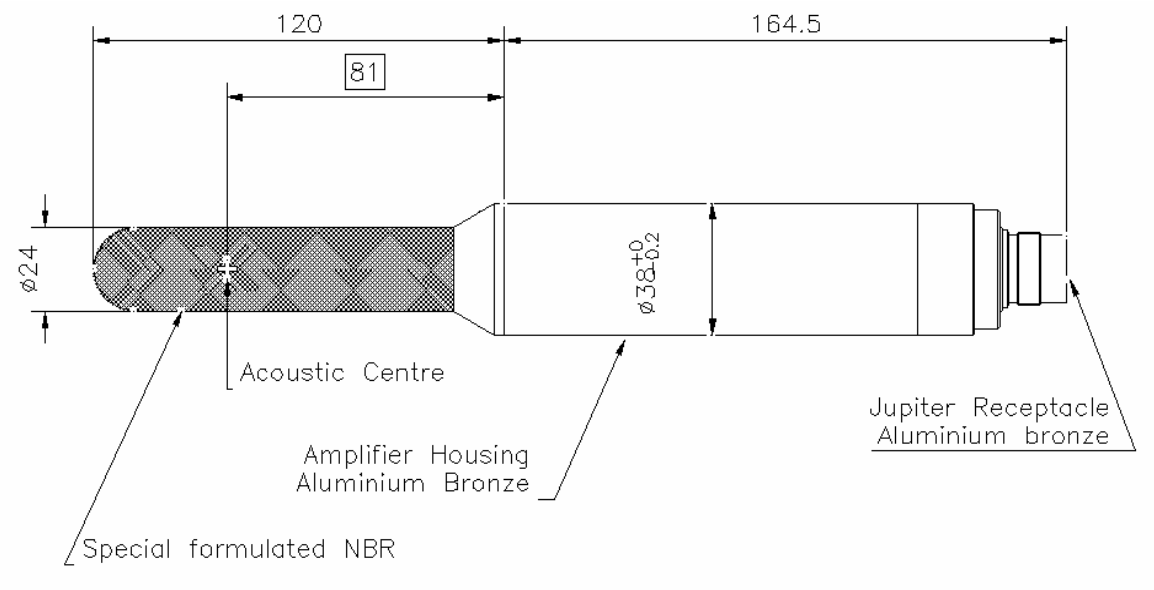

Electrical Diagram

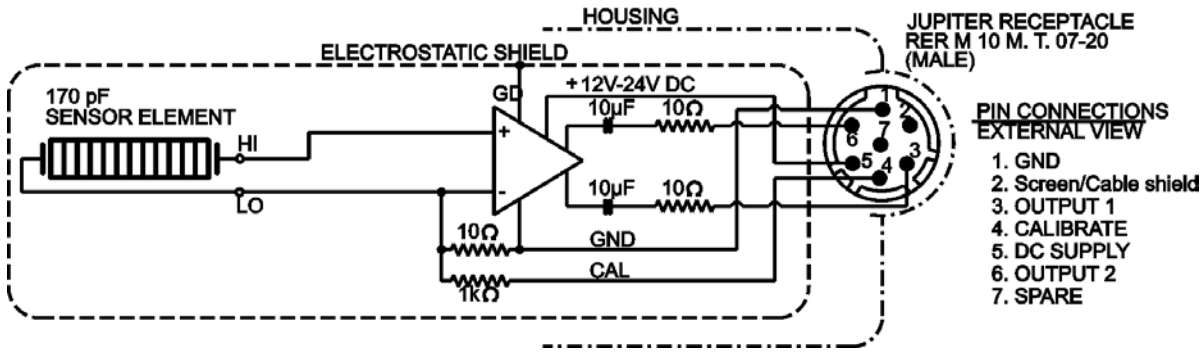

Per default the amplifier is provided with differential output. The differential output is an advantage where long cables are used in an electrically noisy environment. For use in single ended mode: Use positive output pin (3) together with GND.

Insert voltage calibration

The TC4032 preamplifier contains an insert calibration circuit. This allows for electrical calibration of the hydrophone. The calibration method is not an absolute calibration but, it provides a reliable method for testing of the hydrophone, especially for hydrophones in fixed remote installations. The insert sine signal simulates the output signal from the sensor element.

To perform an insert calibration, use an appropriate function generator. The applied calibration signal must not exceed 10 Vrms. A higher voltage may damage the calibration resistor. 2 Vrms will be appropriate for insert calibration. The attenuation of the calibration signal is 30dB for short cables.

Apply the signal to the calibrate input, connector contact 4. = green wire of cable. Connect generator ground to sine generator ground, and measure the signal on hydrophone output.

Hydrophone TC4032

Low Noise Sea-State Zero Hydrophone

Accessories

TL8058
Std.: 10m extension
Weight in ait 1700g
Only for single ended use
Opt.: Different length on request

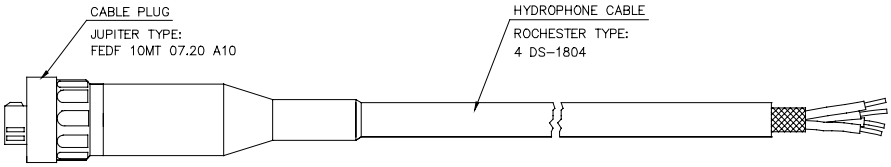

ELECTRICAL WIRING DIAGRAM

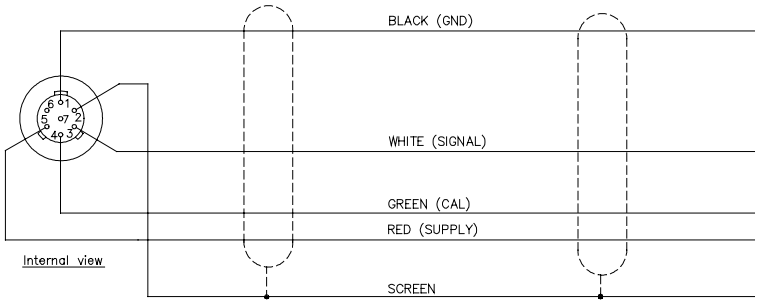

TL8059
Std.: 10m extension
Weight in ait 1800g
Only for single ended use
Opt.: Different length on request

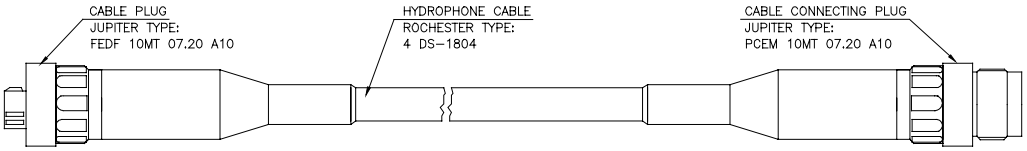

ELECTRICAL WIRING DIAGRAM

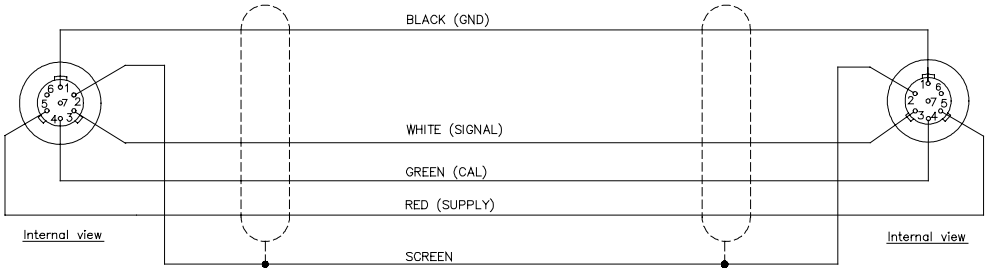

TL8086
Std.: 10m extension
Weight in air 1800g
Only for single ended use
Opt.: Different length on request

Use cable TL8086 to connect directly to EC6070 or EC6073

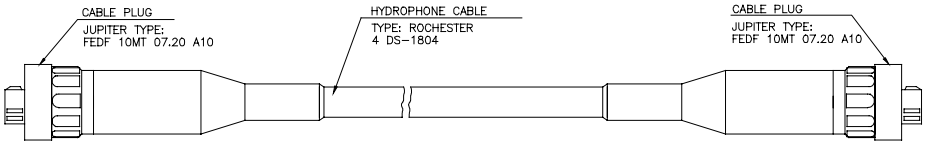

ELECTRICAL WIRING DIAGRAM

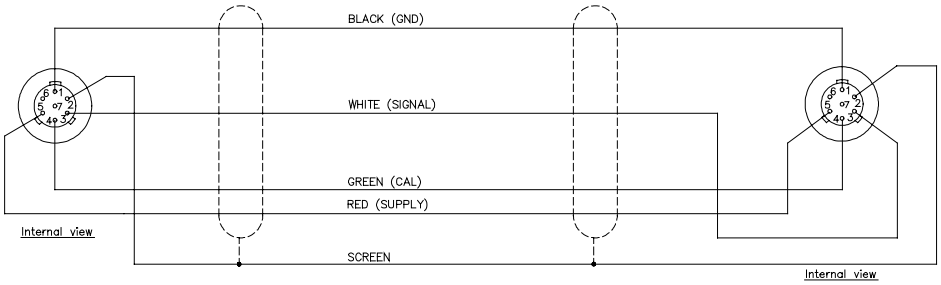

TELEDYNE RESON
Everywhereyoulook™

Hydrophone TC4032

Low Noise Sea-State Zero Hydrophone

Accessories

TL8091
Std.: 10m extension
Weight in ait 1400g
Only for single ended use
Opt.: Different length on request

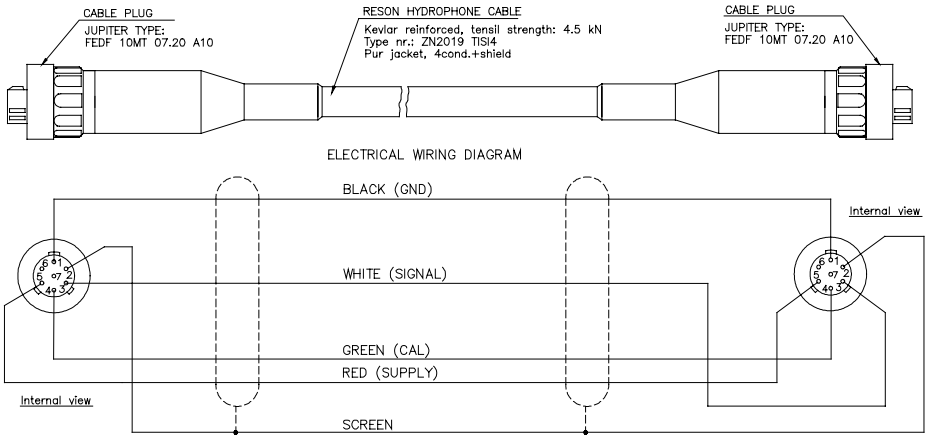

TL8140
For differential and
single ended use

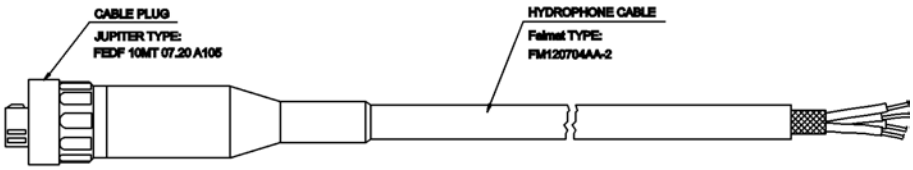

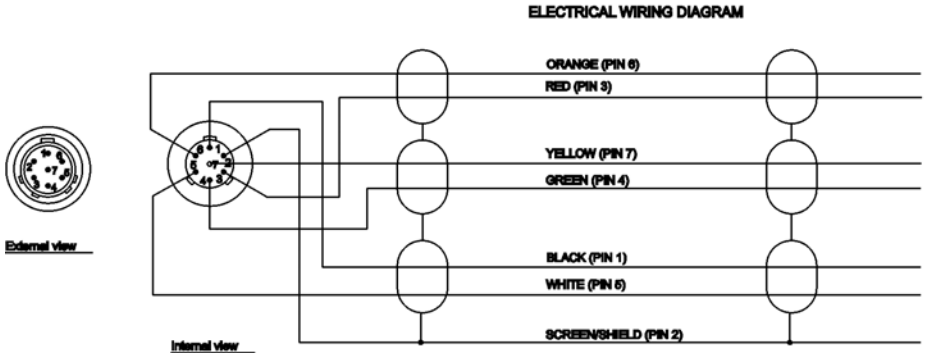

TL8142
For differential and
single ended use

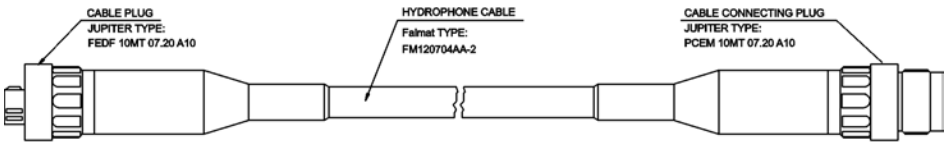

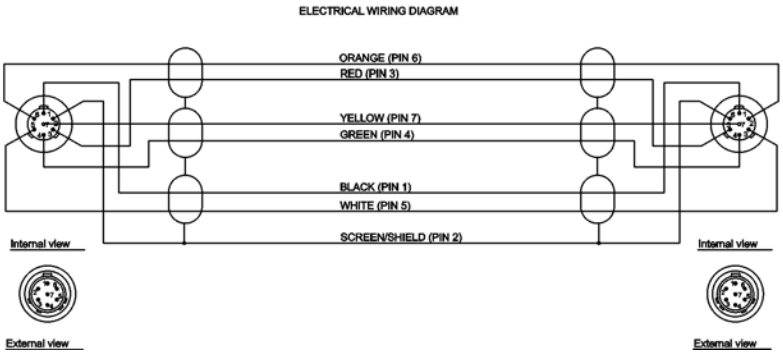

Hydrophone TC4032

Low Noise Sea-State Zero Hydrophone

Accessories

TL8085

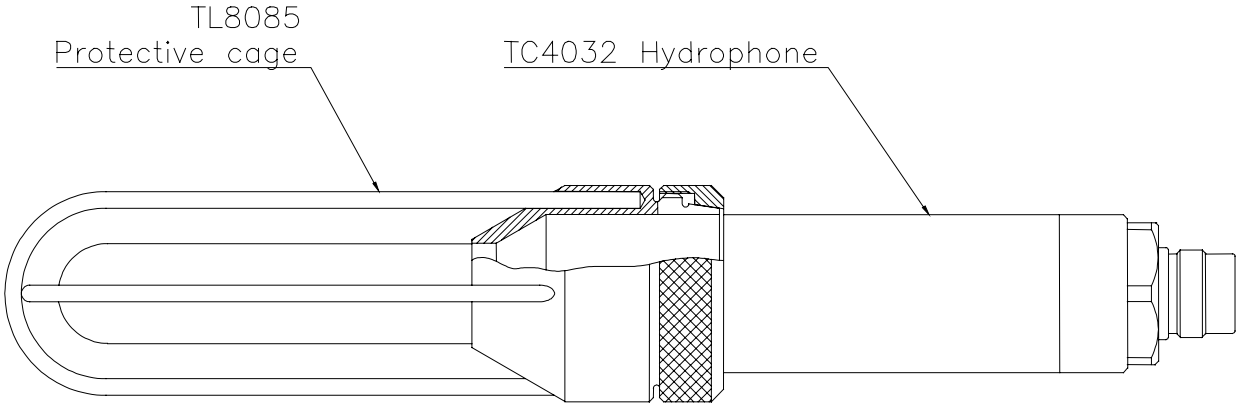

For information on export control regulations on this product, please refer to **www.reson.com**

Version: B110 091103 / US

Teledyne RESON A/S
Denmark
[Redacted]
[Redacted]

Teledyne RESON Inc.
U.S.A.
[Redacted]

Teledyne RESON LTD.
Scotland U.K.
[Redacted]

Teledyne RESON B.V.
The Netherlands
[Redacted]

Teledyne RESON Pte. Ltd.
Singapore
[Redacted
]

Teledyne RESON Shanghai Office
Shanghai
[Redacted]

www.teledyne-reson.com

TELEDYNE RESON
Everywhereyoulook™

MODEL D/70

- OMNI-DIRECTIONAL RESPONSE
- LOW NOISE PERFORMANCE
- ACOUSTIC REFERENCE STANDARD
- BROADBAND OPERATION
- AIR GUN & BOOMER MONITOR
- MARINE MAMMAL AUDIO SENSOR

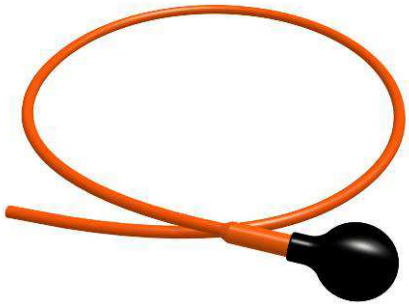

With a combination of broadband frequency response, omni-directional beam pattern and high sensitivity the D/70 has become the most popular hydrophones in the Neptune range of "D" type spherical transducers.

The all moulded construction and inherent strength of the PZT ceramic sphere achieves a robust, light weight, corrosion free design making it the ideal choice as a monitor hydrophone for air gun, boomer and other environments where high levels of shock are experienced.

Electrical connection to the transducer is by a low noise coaxial cable. The extruded polyurethane outer jacket of the cable enables the design engineer to build the transducer into customised equipment packages and readily obtain a waterproof seal by simple moulding techniques.

The D/70 is available with or without acoustic calibration. All calibrations are traceable to National Standards.

This product is stocked by our
world-wide distributor

GSE Rentals Ltd, Aberdeen
[Redacted]

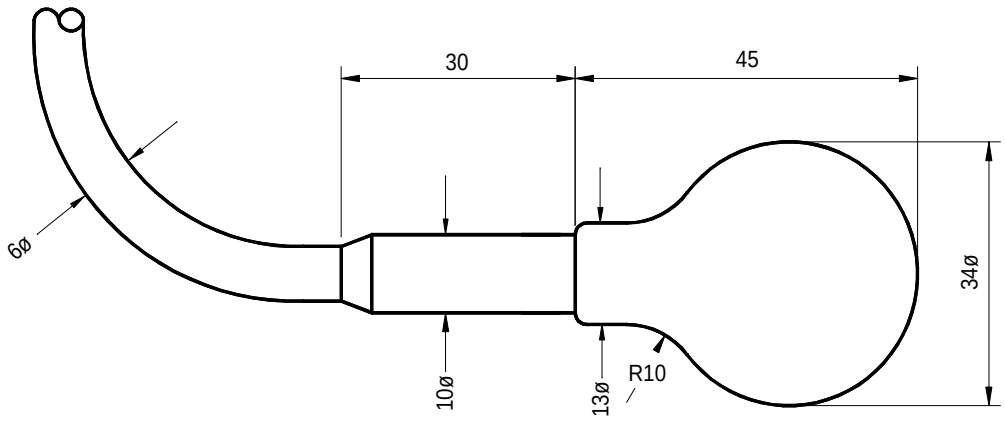

All dimensions in mm

MODEL D/70

Spherical Transducers

Technical Specification

Resonant Frequency	70 kHz (Nominal)
Beam Pattern	Omni ± 1 dB up to 80 kHz
Receive Sensitivity	See Graph
Transmit Sensitivity	See Graph
Capacitance at 1 kHz	9300 pF
Input Power	190 Watts around resonance
Operating Depth	1500 Metres
Operating Temperature	-5 to +40 °C
Storage Temperature	-40 to +80 °C
Cable Type	Polyurethane Ø6mm Low Noise Coaxial
Cable Length	10 metres standard Additional lengths supplied to order

Receive Graph

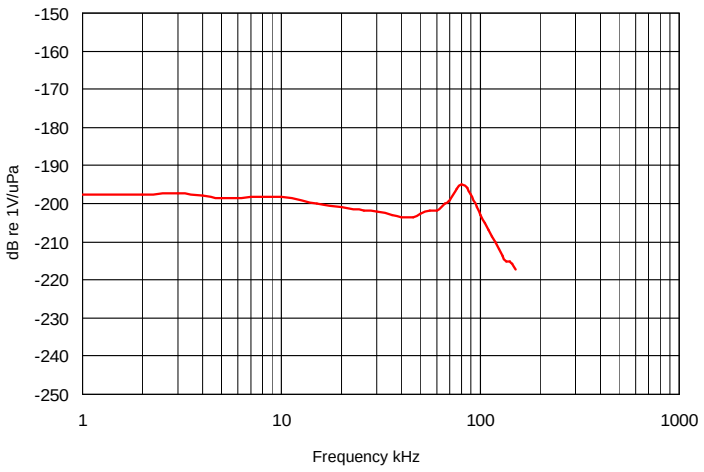

Admittance Plot

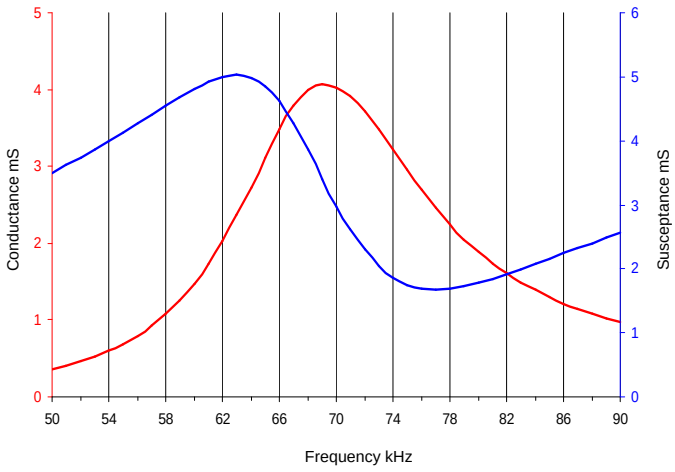

Transmit Graph

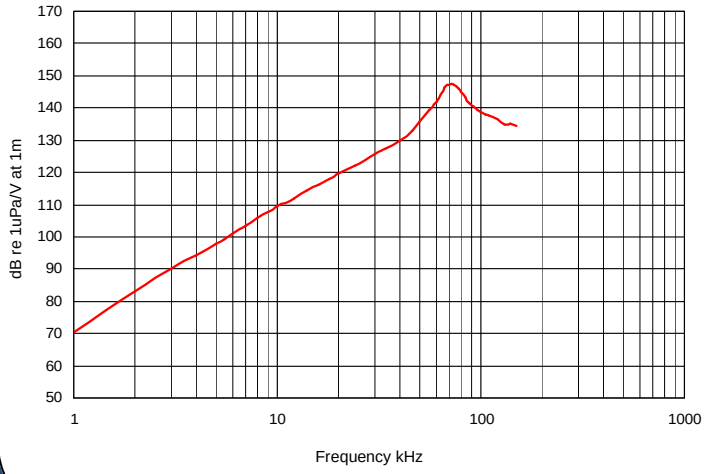

Beam Pattern at 70 kHz

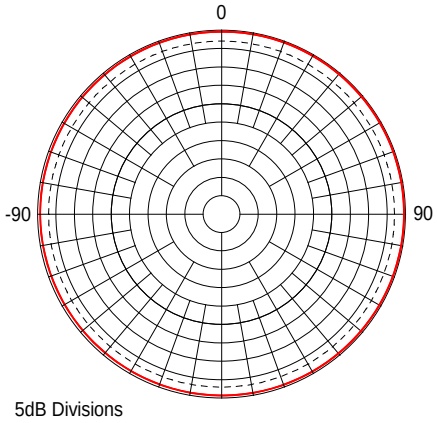

Data illustrated is taken from actual in-water measurements

NEPTUNE SONAR LTD

ACOUSTIC CALIBRATION LABORATORY

TEST CERTIFICATE

PROJECT REF:	6587
SERIAL NUMBER:	None
TRANSDUCER TYPE:	TC4032-1 Reson
DESCRIPTION:	Teledyne Reson + H4B Box
TEST SPECIFICATION:	Test Instructions
ISSUE DATE:	18 July 2018

Ref Projector:	D/11_18684	**Ref Projector:**	D/26_22769
Ref Projector:	D/70_34376	**Ref Projector:**	D/140_29373

TABULATED RESULTS	**(3 pages)**
HYDROPHONE SENSITIVITY GRAPH	**(2 pages)**
POLAR PLOT	**(1 page)**

[Redacted]

[Redacted]

Customer:

Neptune Sonar Ltd
Kelk Lake
Kelk
Driffield
East Yorkshire
[Redacted]

Eco Fish Global Ltd
Aberdeen Harbour
Expansion Project
St Fitting Road
Nigg Bay
AB11 8TN

The reported expanded uncertainty is based on a standard uncertainty multiplied by a coverage factor k = 2, providing a level of confidence of approximately 95%

NEPTUNE SONAR LTD

ACOUSTIC CALIBRATION LABORATORY

CALIBRATION DATE: 18 July 2018 at 14:39
TRANSDUCER TYPE: TC4032-1 Reson
SERIAL NUMBER: None
CALIBRATED BY: [Redact

PROJECT No.: 6587
DESCRIPTION: Teledyne Reson + H4B Box
TEST SPECIFICATION: Test Instructions
WATER TEMPERATURE: 22°C (±0.5)
CABLE: 10m cable

REMARKS: 10dB Pre-amp and H4B Box.
Tested on lowest gain settings with no filters selected

FREQUENCY (kHz) (±0.005%)	HYDROPHONE SENSITIVITY (dBre1V/μPa)	UNCERTAINTY (dB)
1.000	-164.8	±1.5
2.000	-165.5	±1.0
3.000	-164.9	±1.0
4.000	-165.3	±1.0
5.000	-165.4	±1.0
6.000	-165.8	±1.0
7.000	-166.1	±1.0
8.000	-166.0	±1.0
9.000	-165.8	±1.0
10.000	-165.7	±1.0
11.000	-165.6	±1.0
12.000	-165.4	±1.0
13.000	-166.1	±1.0
14.000	-166.3	±1.0
15.000	-166.3	±1.0
16.000	-165.8	±1.0
17.000	-165.8	±1.0
18.000	-166.1	±1.0
19.000	-165.9	±1.0
20.000	-165.7	±1.0
21.000	-165.7	±1.0
22.000	-166.3	±1.0
23.000	-165.9	±1.0
24.000	-165.7	±1.0
25.000	-165.5	±1.0
26.000	-165.4	±1.0
27.000	-165.1	±1.0
28.000	-165.1	±1.0
29.000	-165.5	±1.0
30.000	-165.5	±1.0

NEPTUNE SONAR LTD

ACOUSTIC CALIBRATION LABORATORY

CALIBRATION DATE: 18 July 2018 at 14:39
TRANSDUCER TYPE: TC4032-1 Reson
SERIAL NUMBER: None
CALIBRATED BY: [Redacted]

PROJECT No.: 6587
DESCRIPTION: Teledyne Reson + H4B Box
TEST SPECIFICATION: Test Instructions
WATER TEMPERATURE: 22°C (±0.5)
CABLE: 10m cable

REMARKS: 10dB Pre-amp and H4B Box.
Tested on lowest gain settings with no filters selected

FREQUENCY (kHz) (±0.005%)	HYDROPHONE SENSITIVITY (dBre1V/μPa)	UNCERTAINTY (dB)
31.000	-165.4	±1.0
32.000	-165.0	±1.0
33.000	-165.1	±1.0
34.000	-165.3	±1.0
35.000	-165.5	±1.0
36.000	-165.5	±1.0
37.000	-165.3	±1.0
38.000	-165.2	±1.0
39.000	-165.1	±1.0
40.000	-164.8	±1.0
41.000	-164.7	±1.0
42.000	-164.8	±1.0
43.000	-164.8	±1.0
44.000	-164.8	±1.0
45.000	-164.8	±1.0
50.000	-163.8	±1.0
55.000	-163.2	±1.0
60.000	-163.5	±1.0
65.000	-164.0	±1.0
70.000	-164.3	±1.0
75.000	-165.3	±1.0
80.000	-166.1	±1.0
85.000	-167.1	±1.0
90.000	-167.4	±1.0
95.000	-168.3	±1.0
100.000	-169.5	±1.0
105.000	-170.5	±1.0
110.000	-171.8	±1.0
115.000	-173.3	±1.0
120.000	-174.7	±1.0

NEPTUNE SONAR LTD

ACOUSTIC CALIBRATION LABORATORY

CALIBRATION DATE: 18 July 2018 at 14:39
TRANSDUCER TYPE: TC4032-1 Reson
SERIAL NUMBER: None
CALIBRATED BY: [Redacted]

PROJECT No.: 6587
DESCRIPTION: Teledyne Reson + H4B Box
TEST SPECIFICATION: Test Instructions
WATER TEMPERATURE: 22°C (±0.5)
CABLE: 10m cable

REMARKS: 10dB Pre-amp and H4B Box.
Tested on lowest gain settings with no filters selected

FREQUENCY (kHz) (±0.005%)	HYDROPHONE SENSITIVITY (dBre1V/μPa)	UNCERTAINTY (dB)
125.000	-176.0	±1.0
130.000	-176.5	±1.0
135.000	-178.3	±1.0
140.000	-180.4	±1.0
145.000	-182.5	±1.0
150.000	-184.0	±1.0

NEPTUNE SONAR LTD

ACOUSTIC CALIBRATION LABORATORY

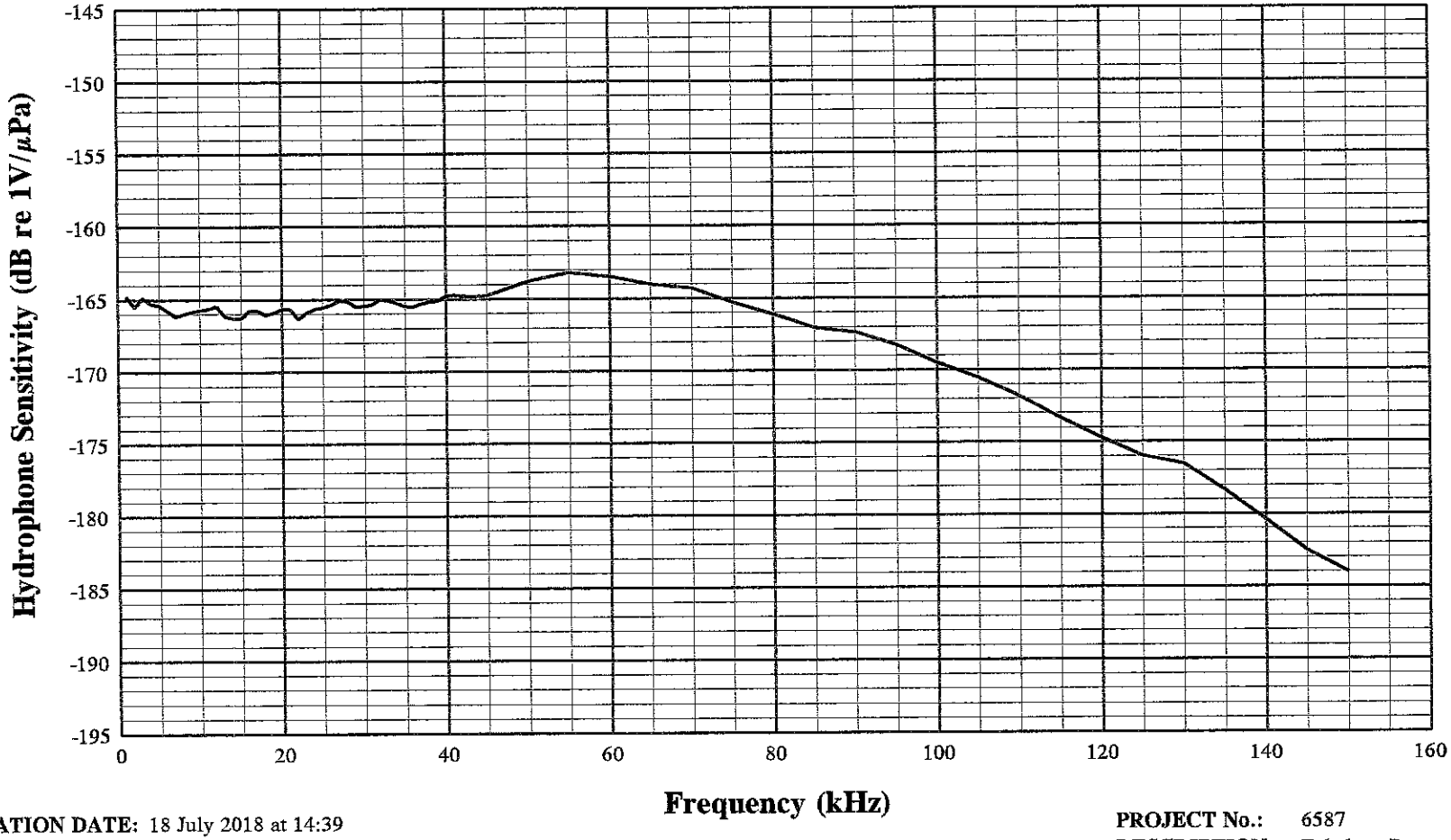

CALIBRATION DATE: 18 July 2018 at 14:39
TRANSDUCER TYPE: TC4032-1 Reson
SERIAL NUMBER: None
CALIBRATED BY: dl te ac ed IR
REMARKS: 10dB Pre-amp and H4B Box.
Tested on lowest gain settings with no filters selected

PROJECT No.: 6587
DESCRIPTION: Teledyne Reson + H4B Box
TEST SPEC: Test Instructions
WATER TEMP: 22°C (±0.5)
CABLE: 10m cable

Ref:-M_Reson(H4B):14:41:33

NEPTUNE SONAR LTD

ACOUSTIC CALIBRATION LABORATORY

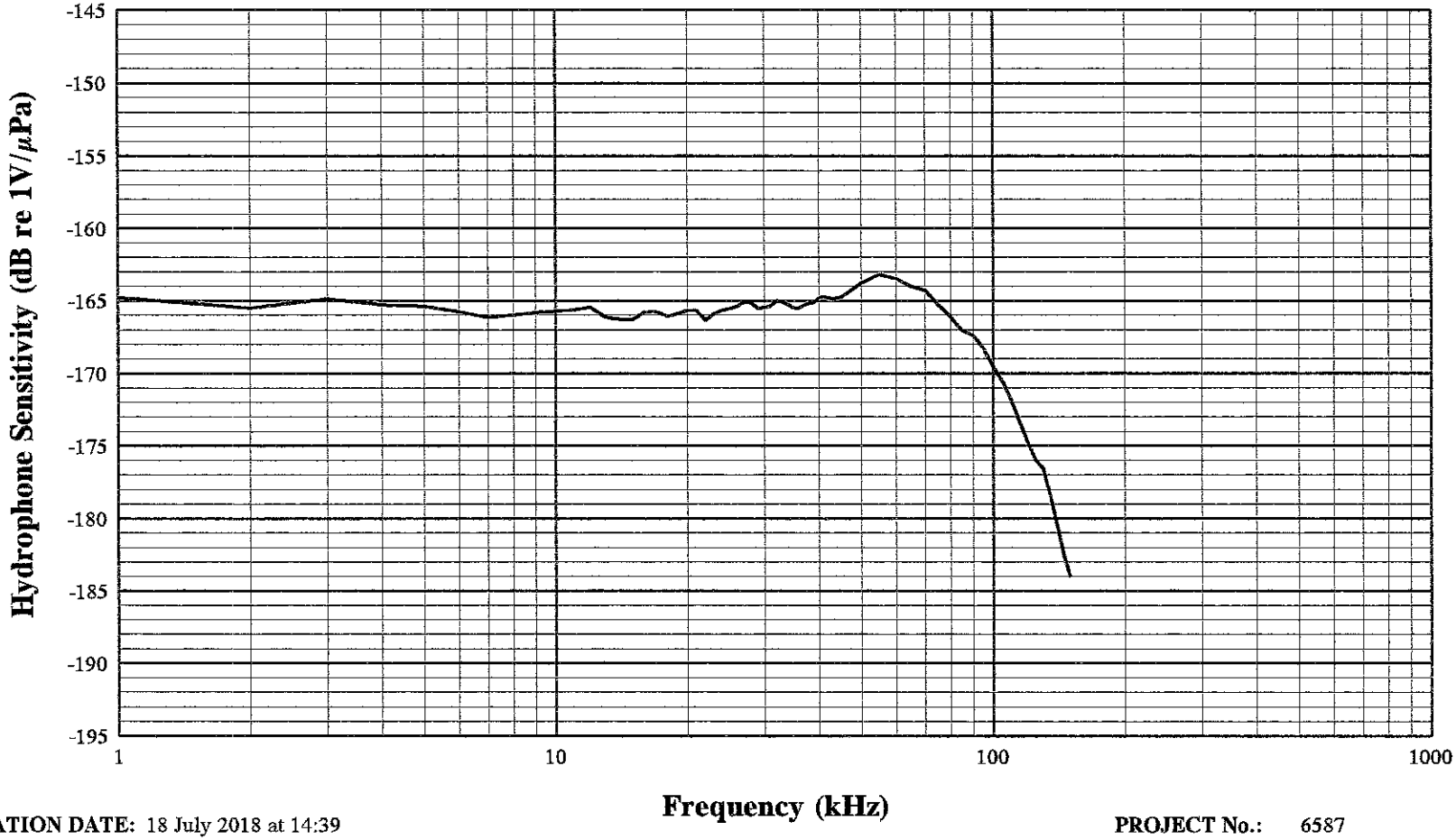

CALIBRATION DATE: 18 July 2018 at 14:39
TRANSDUCER TYPE: TC4032-1 Reson
SERIAL NUMBER: None
CALIBRATED BY: [illegible]
REMARKS: 10dB Pre-amp and H4B Box.
Tested on lowest gain settings with no filters selected

PROJECT No.: 6587
DESCRIPTION: Teledyne Reson + H4B Box
TEST SPEC: Test Instructions
WATER TEMP: 22°C (±0.5)
CABLE: 10m cable

Ref:-M_Reson(H4B):14:41:21

NEPTUNE SONAR LTD

ACOUSTIC CALIBRATION LABORATORY

CALIBRATION DATE:	18 July 2018 at 13:42	**PROJECT NO.:**	6587
TRANSDUCER TYPE:	TC4032-1 Reson	**DESCRIPTION:**	Teledyne Reson + H4B Box
SERIAL NUMBER:	None	**TEST SPECIFICATION:**	Test Instructions
CALIBRATED BY:	[Redacted]	**WATER TEMPERATURE:**	22°C

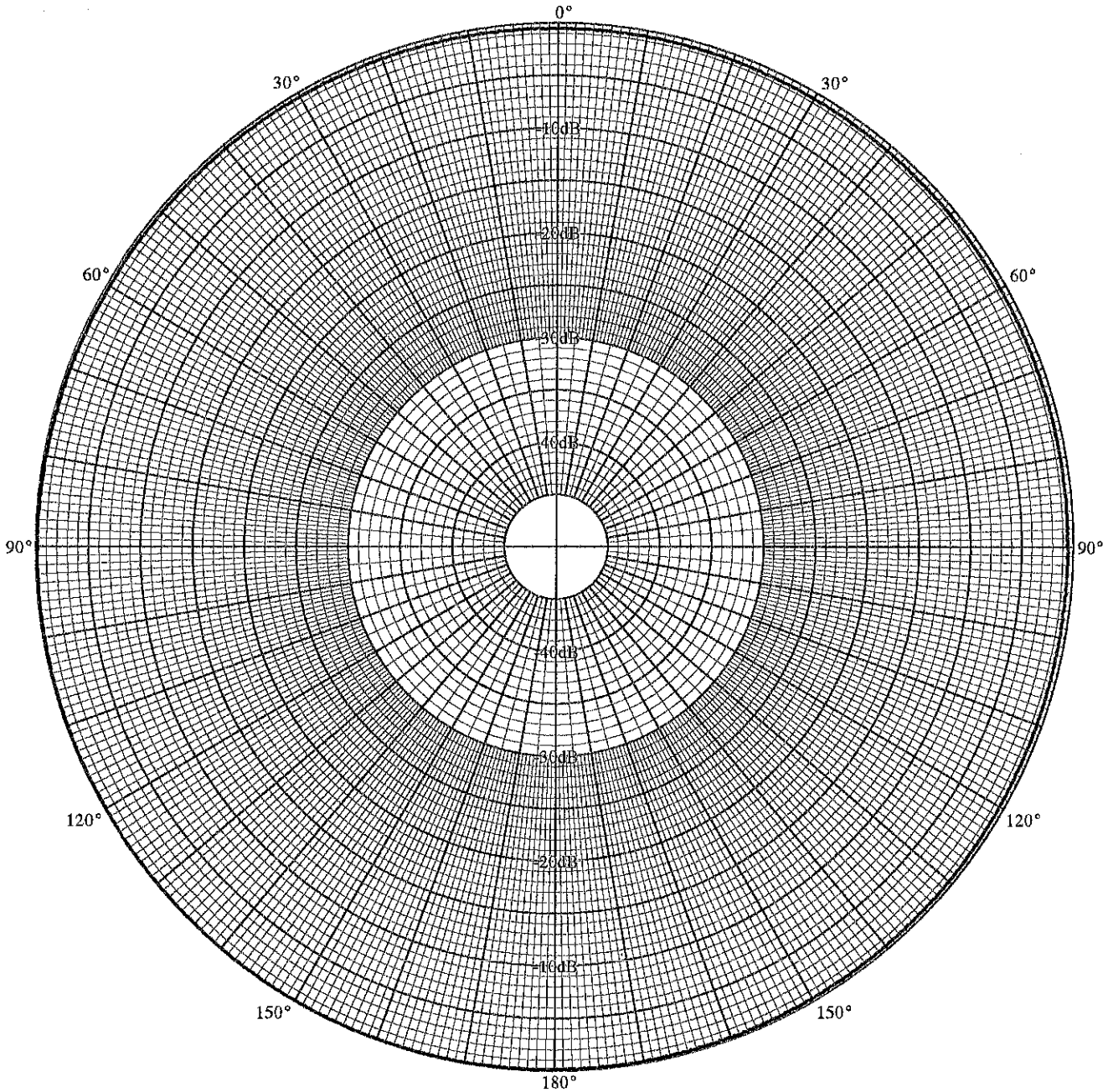

FREQUENCY:	10 kHz	**3dB BEAMWIDTH:**	N/A
0° ALIGNMENT:	MECHANICAL	**OVERALL VARIATION:**	.7dB
ROTATION:	360°	**SMOOTHING APPLIED:**	None

REMARKS: 10dB Pre-amp and H4B Box.
Tested on lowest gain settings with no filters selected

Ref:-PH@10_Reson_H4B:13:43:04

APPENDIX B - CALIBRATION CERTIFICATES

Chickerell Bioacoustics H10
Neptune D/70 (H0 + H4)
RESON (TC4032-1) (H4B)

NEPTUNE SONAR LTD

ACOUSTIC CALIBRATION LABORATORY

TEST CERTIFICATE

PROJECT REF:	6587
SERIAL NUMBER:	None
TRANSDUCER TYPE:	H10 (C B)
DESCRIPTION:	H10 + H10 Box
TEST SPECIFICATION:	Test Instructions
ISSUE DATE:	19 July 2018

TABULATED RESULTS	**(3 pages)**
HYDROPHONE SENSITIVITY GRAPH	**(2 pages)**
POLAR PLOT	**(1 page)**

[Redacted]

[Redacted]

Issued by:

Neptune Sonar Ltd
Kelk Lake
Kelk
Driffield
East Yorkshire

[Redacted]

Customer:

Eco Fish Global Ltd
Aberdeen Harbour
Expansion Project
St Fittings Road
Nigg Bay
AB11 8TN

The reported expanded uncertainty is based on a standard uncertainty multiplied by a coverage factor k = 2, providing a level of confidence of approximately 95%

NEPTUNE SONAR LTD

ACOUSTIC CALIBRATION LABORATORY

CALIBRATION DATE: 19 July 2018 at 9:25
TRANSDUCER TYPE: H10 (C B)
SERIAL NUMBER: None
CALIBRATED BY: [Redacted]

PROJECT No.: 6587
DESCRIPTION: H10 + H10 Box
TEST SPECIFICATION: Test Instructions
WATER TEMPERATURE: 22°C (±0.5)
CABLE: 15m cable

REMARKS: +26dB to -20db switchable pre amp
Tested with H10TU set to -20dB

FREQUENCY (kHz) (±0.005%)	HYDROPHONE SENSITIVITY (dBre1V/μPa)	UNCERTAINTY (dB)
1.000	-221.4	±1.5
2.000	-221.2	±1.0
3.000	-223.1	±1.0
4.000	-221.2	±1.0
5.000	-220.3	±1.0
6.000	-221.3	±1.0
7.000	-220.9	±1.0
8.000	-221.1	±1.0
9.000	-221.3	±1.0
10.000	-221.8	±1.0
11.000	-222.1	±1.0
12.000	-221.7	±1.0
13.000	-221.9	±1.0
14.000	-221.5	±1.0
15.000	-221.6	±1.0
16.000	-221.1	±1.0
17.000	-221.7	±1.0
18.000	-222.3	±1.0
19.000	-221.9	±1.0
20.000	-222.1	±1.0
21.000	-222.3	±1.0
22.000	-223.0	±1.0
23.000	-223.1	±1.0
24.000	-223.5	±1.0
25.000	-223.6	±1.0
26.000	-223.6	±1.0
27.000	-223.3	±1.0
28.000	-223.4	±1.0
29.000	-223.4	±1.0
30.000	-223.2	±1.0

NEPTUNE SONAR LTD

ACOUSTIC CALIBRATION LABORATORY

CALIBRATION DATE: 19 July 2018 at 9:25
TRANSDUCER TYPE: H10 (C B)
SERIAL NUMBER: None
CALIBRATED BY: [Redacted]

PROJECT No.: 6587
DESCRIPTION: H10 + H10 Box
TEST SPECIFICATION: Test Instructions
WATER TEMPERATURE: 22°C (±0.5)
CABLE: 15m cable

REMARKS: +26dB to -20db switchable pre amp
Tested with H10TU set to -20dB

FREQUENCY (kHz) (±0.005%)	HYDROPHONE SENSITIVITY (dBre1V/μPa)	UNCERTAINTY (dB)
31.000	-223.2	±1.0
32.000	-223.0	±1.0
33.000	-223.0	±1.0
34.000	-223.2	±1.0
35.000	-223.3	±1.0
36.000	-223.4	±1.0
37.000	-223.8	±1.0
38.000	-224.5	±1.0
39.000	-225.0	±1.0
40.000	-225.0	±1.0
41.000	-225.0	±1.0
42.000	-225.0	±1.0
43.000	-225.2	±1.0
44.000	-225.4	±1.0
45.000	-225.4	±1.0
50.000	-225.9	±1.0
55.000	-226.6	±1.0
60.000	-227.3	±1.0
65.000	-229.0	±1.0
70.000	-227.9	±1.0
75.000	-229.3	±1.0
80.000	-229.1	±1.0
85.000	-227.9	±1.0
90.000	-226.3	±1.0
95.000	-225.2	±1.0
100.000	-225.5	±1.0
105.000	-225.8	±1.0
110.000	-226.2	±1.0
115.000	-226.4	±1.0
120.000	-226.0	±1.0

NEPTUNE SONAR LTD

ACOUSTIC CALIBRATION LABORATORY

CALIBRATION DATE: 19 July 2018 at 9:25
TRANSDUCER TYPE: H10 (C B)
SERIAL NUMBER: None
CALIBRATED BY: [Redacted]

PROJECT No.: 6587
DESCRIPTION: H10 + H10 Box
TEST SPECIFICATION: Test Instructions
WATER TEMPERATURE: 22°C (±0.5)
CABLE: 15m cable

REMARKS: +26dB to -20db switchable pre amp
Tested with H10TU set to -20dB

FREQUENCY (kHz) (±0.005%)	HYDROPHONE SENSITIVITY (dBre1V/μPa)	UNCERTAINTY (dB)
125.000	-224.0	±1.0
130.000	-227.2	±1.0
135.000	-230.8	±1.0
140.000	-234.9	±1.0
145.000	-238.8	±1.0
150.000	-239.0	±1.0

NEPTUNE SONAR LTD

ACOUSTIC CALIBRATION LABORATORY

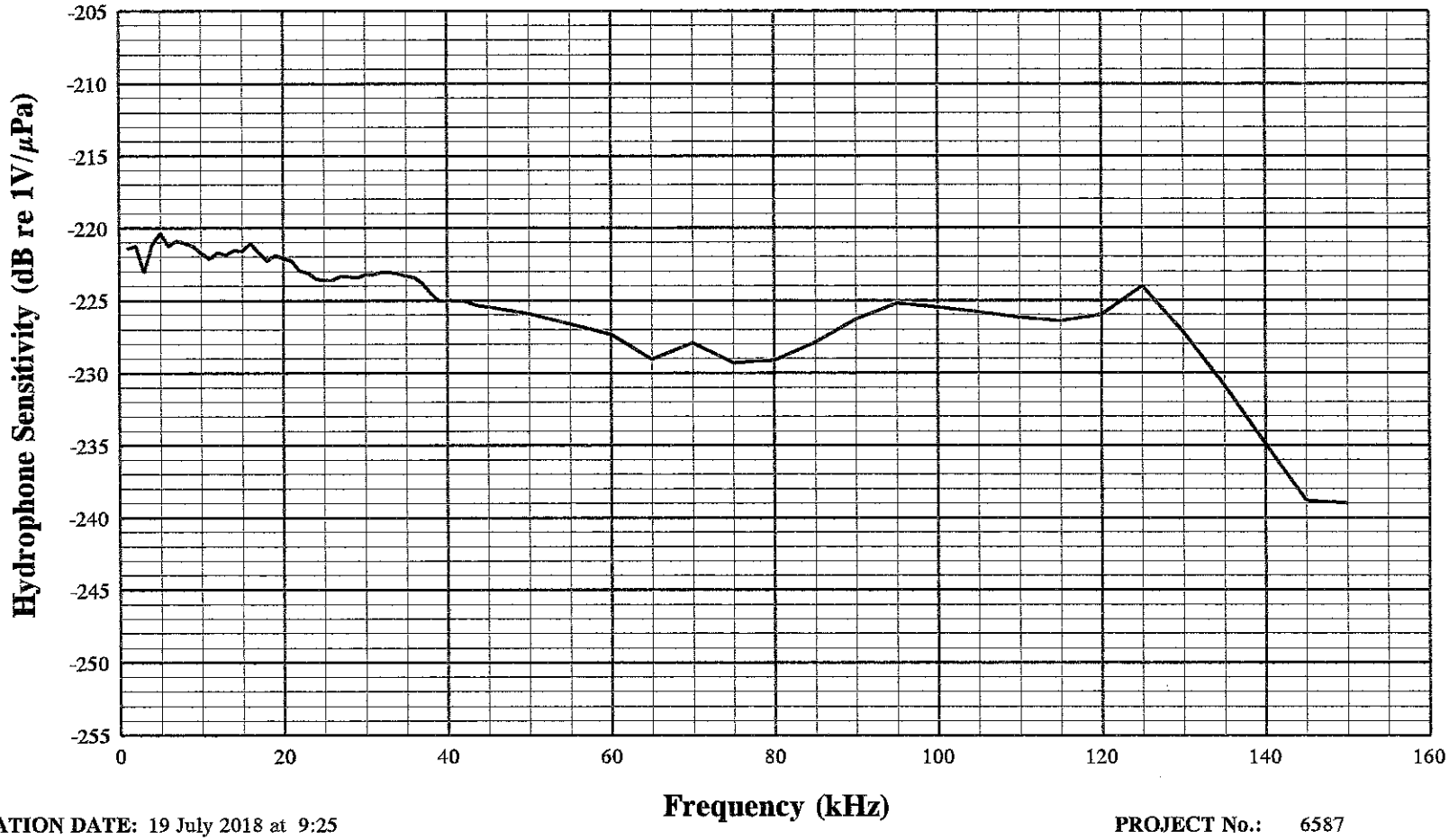

CALIBRATION DATE: 19 July 2018 at 9:25
TRANSDUCER TYPE: H10 (C B)
SERIAL NUMBER: None
CALIBRATED BY: [Redacted]
REMARKS: +26dB to -20db switchable pre amp
Tested with H10TU set to -20dB

PROJECT No.: 6587
DESCRIPTION: H10 + H10 Box
TEST SPEC: Test Instructions
WATER TEMP: 22°C (±0.5)
CABLE: 15m cable

Ref:-M_H10(H10TU):12:27:41

NEPTUNE SONAR LTD

ACOUSTIC CALIBRATION LABORATORY

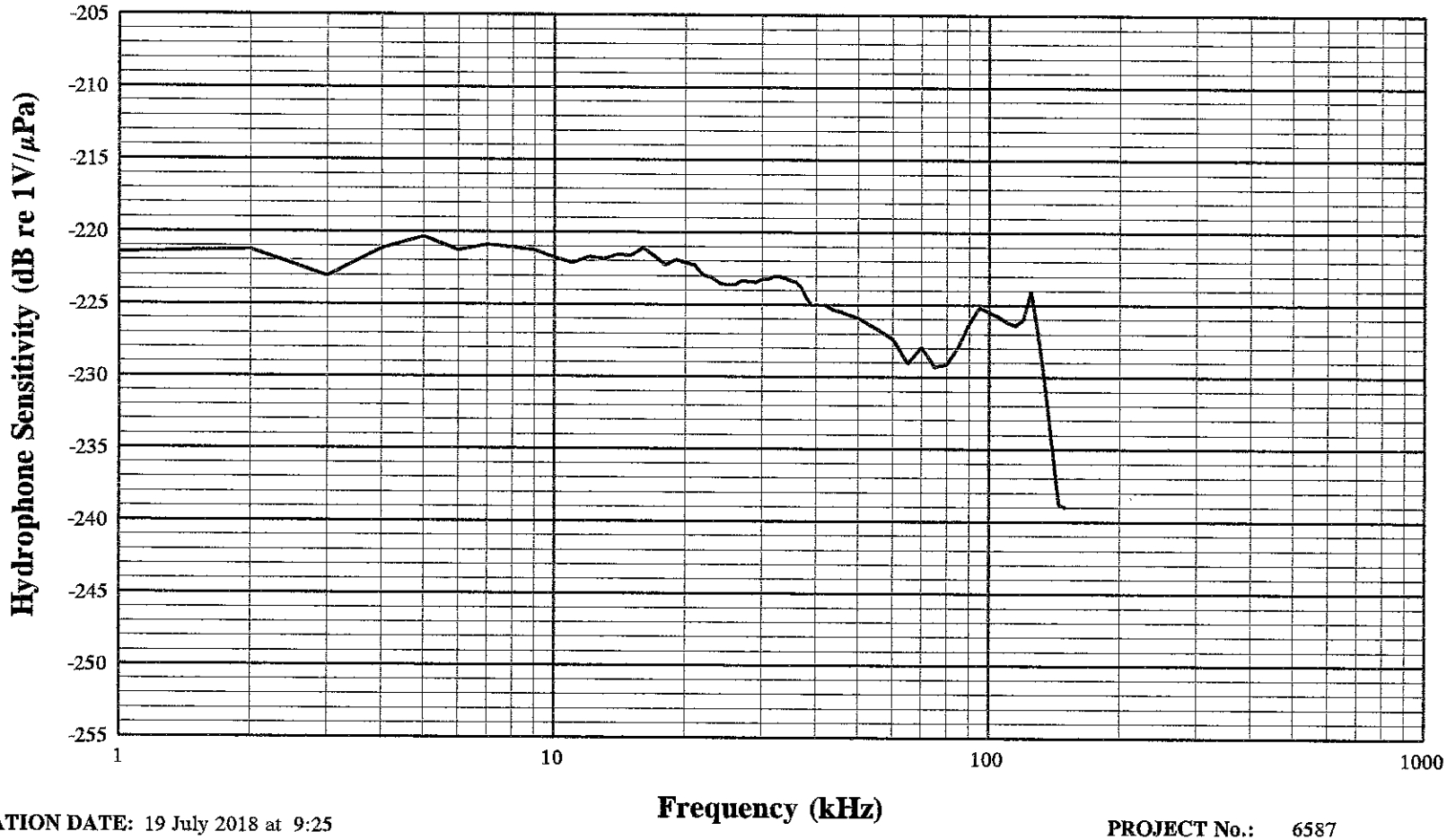

CALIBRATION DATE: 19 July 2018 at 9:25
TRANSDUCER TYPE: H10 (C B)
SERIAL NUMBER: None
CALIBRATED BY: [Reacted]
REMARKS: +26dB to -20db switchable pre amp
Tested with H10TU set to -20dB

PROJECT No.: 6587
DESCRIPTION: H10 + H10 Box
TEST SPEC: Test Instructions
WATER TEMP: 22°C (±0.5)
CABLE: 15m cable

Ref:-M_H10(H10TU):12:27:51

NEPTUNE SONAR LTD

ACOUSTIC CALIBRATION LABORATORY

CALIBRATION DATE:	19 July 2018 at 8:37	**PROJECT NO.:**	6587
TRANSDUCER TYPE:	H10 (C B)	**DESCRIPTION:**	H10 + H10 Box
SERIAL NUMBER:	None	**TEST SPECIFICATION:**	Test Instructions
CALIBRATED BY:	[Redacted]	**WATER TEMPERATURE:**	22°C

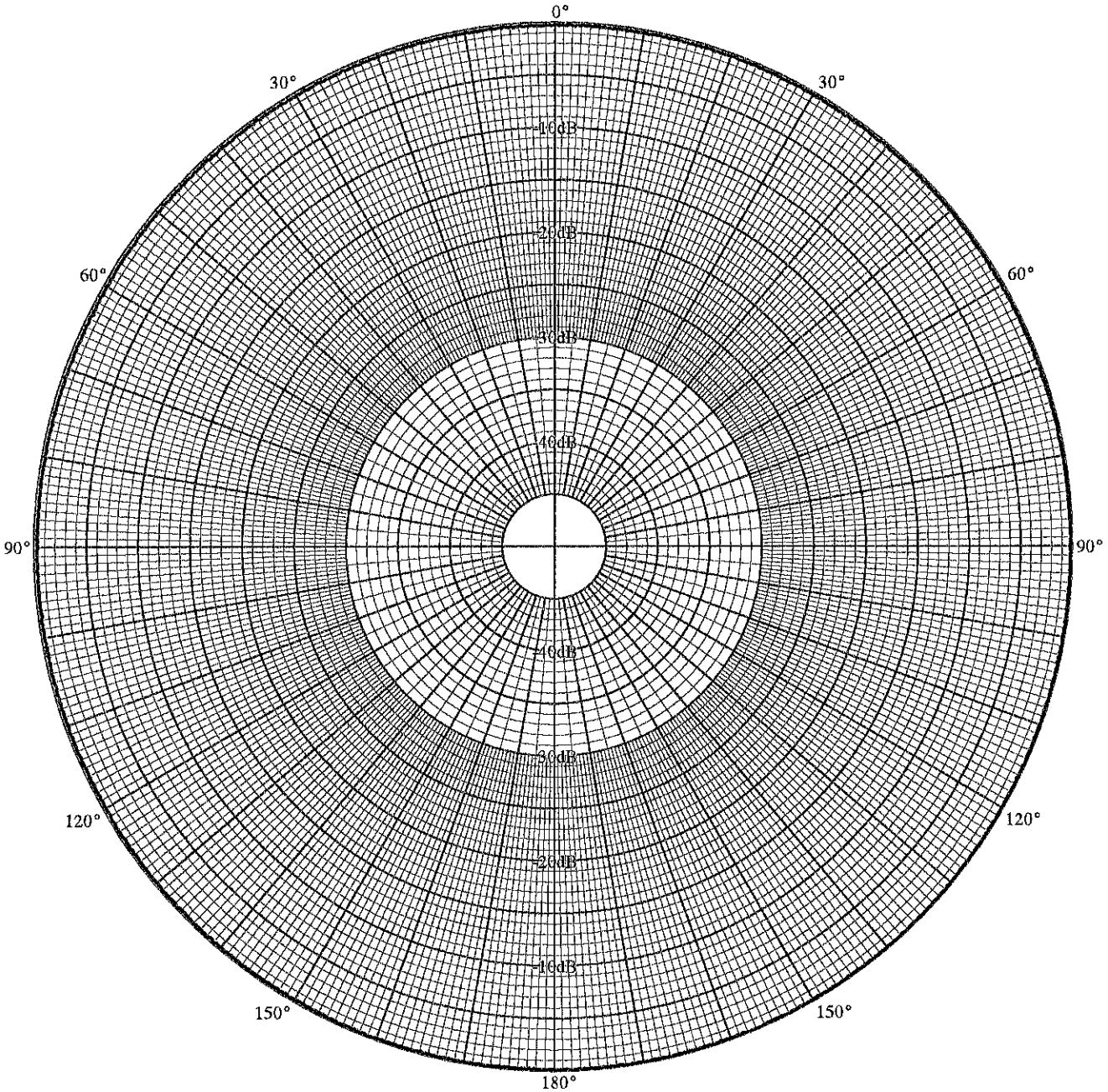

FREQUENCY:	10 kHz	**3dB BEAMWIDTH:**	N/A
0° ALIGNMENT:	MECHANICAL	**OVERALL VARIATION:**	.4dB
ROTATION:	360°	**SMOOTHING APPLIED:**	None

REMARKS: +26dB to -20db switchable pre amp
Tested with H10TU set to -20dB

Ref:-PH@10_H10(H10TU):12:26:42