Shetland Tidal Array
Monitoring Report
Subsea video monitoring 2020-2022

Version 2.0

Document control

Title:	Shetland Tidal Array Monitoring Report Subsea video monitoring 2020-2022
Document ID:	EnFAIT-0393
Version	Version 2.0
Prepared for:	Marine Scotland Licensing Operations Team Shetland Islands Council
Author:	Kate Smith, Ruairidh Norwood, Sam Olsen
Approved by:	Gavin McPherson
Release date:	12-Dec-22
Confidentiality:	COMMERCIAL IN CONFIDENCE

Revision history

Version	Release date	Purpose/summary of amendments
1.0	31/10/2022	To present results from analysis of subsea video footage gathered from the Shetland Tidal Array, Bluemull Sound from March 2020 to March 2022
2.0	12/12/2022	Incorporates feedback on Version 1.0 following consultation with Marine Scotland Licensing Operations Team, Shetland Islands Council and NatureScot.

Notice

Contents

1 Summary

Nova Innovation's ongoing programme of environmental monitoring for the Shetland Tidal Array in Bluemull Sound comprises the following two key components:

1. Land-based diving bird and marine mammal observation surveys in Bluemull Sound.
2. Subsea monitoring using turbine-mounted optical video cameras.

Combined, these two methods gather data to understand the likely nature and consequences of any nearfield interactions between turbines in the array and marine wildlife, with a focus on mammals and diving birds.

This report presents results from subsea video monitoring conducted between March 2020 and March 2022, building on the last monitoring report published in 2021 (Nova Innovation, 2021a). Results are presented from manual review and analysis of a representative subset of all subsea video footage captured from 2020 to 2022 covering all seasons, months, times of the day (daylight hours) and all tidal states. The subset also includes targeted occasions when land-based survey data, and incidental cetacean sightings reported in Bluemull Sound identified a potentially enhanced likelihood of nearfield interactions between marine wildlife and turbines.

The focus of analysis of the video footage is to identify any occurrences and consequences of nearfield interactions between diving birds, marine mammals and fish and turbines (particularly operating turbines). Key factors influencing such interactions are also explored, as are the behaviours of the animals observed.

A total of 1,645 hours of video footage, comprising 6,579 separate video clips from turbine-mounted cameras have been systematically reviewed and analysed in this report. This represents around 6% of the approximately 28,000 hours of footage gathered between March 2020 and March 2022. An additional, but unquantified subset of the total dataset for this period has been reviewed during routine surveillance of turbine performance, during which any instances of diving birds or marine mammals observed are also reported.

Additional reports present the results of the land-based surveys of birds and mammals conducted between March 2020 and March 2022 (Nova Innovation, 2022a; Holmes, 2022). Key findings are integrated into the discussion section of this report to facilitate interpretation of the observed occupancy patterns of mobile species around turbines in the Shetland Tidal Array. This enables an evidence-based approach to assessing the likelihood that diving birds and marine mammals might interact with turbines in the Shetland Tidal Array, and key influencing factors. This has enabled new insights into impact risk for the different species, further building on learning since the commencement of the monitoring programme in November 2010.

2 The Shetland Tidal Array

2.1 Location

The Shetland Tidal Array is situated in Bluemull Sound, between the islands of Unst and Yell, just offshore from the Ness of Cullivoe, as illustrated in Figure 2-1.

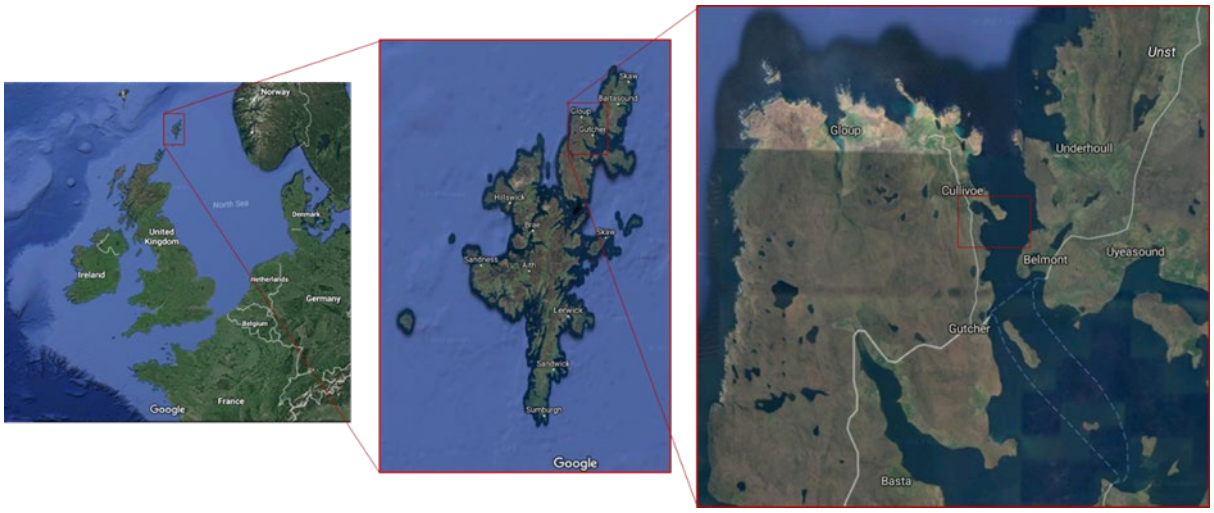

Figure 2-1 Location of the Shetland Tidal Array in Bluemull Sound, Shetland.

2.2 Project details

The Shetland Tidal Array currently consists of four Nova 100 kw tidal turbines, 2-bladed, horizontal axis devices, shown in Figure 2-2. The fourth turbine installed is a direct drive device (no gearbox).

Figure 2-2 The Nova M100 turbine. *Source: Nova Innovation 2018*

The first two turbines (T1 and T2) were deployed in October 2015 and August 2016, the third (T3), in August 2017 and the fourth (T4) in October 2020.

All four turbines are installed subsea at a depth of 30-40m. The turbines use gravity base foundations that require no piling or drilling. Figure 2-3 shows the layout of the existing four turbines and infrastructure in the Shetland Tidal Array, as well as the planned location of two further turbines (T5 and T6) scheduled to be installed in late 2022/early 2023.

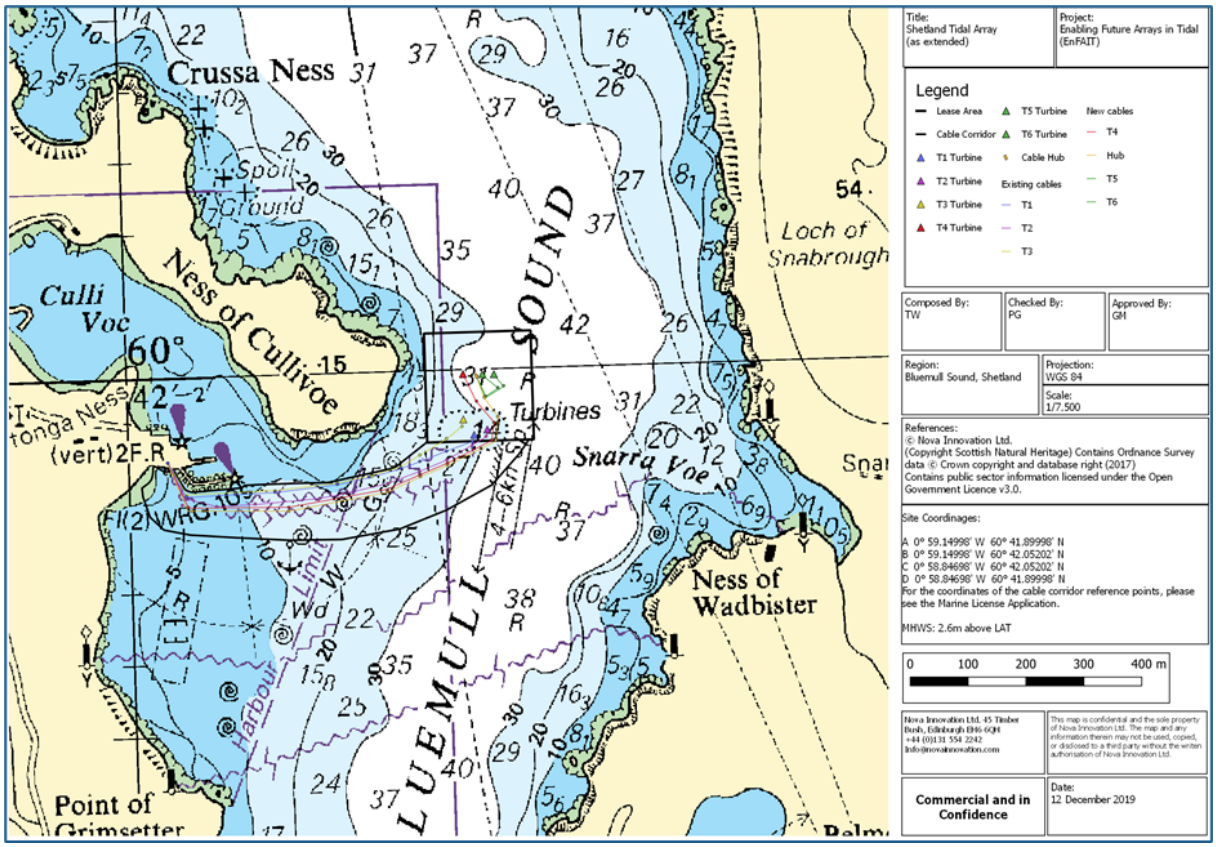

Figure 2-3 Shetland Tidal Array layout (Admiralty Chart). *Source: Nova Innovation 2020 © Crown Copyright*

2.3 Overview of environmental monitoring programme

Full details of the programme of environmental monitoring of Nova Innovation's Shetland Tidal Array in Bluemull Sound, Shetland are provided in the Project Environmental Monitoring Plan (Nova Innovation, 2022b). The monitoring comprises the following two key components, which combined gather data to understand the likely nature and consequences of any nearfield interactions between turbines in the array and marine wildlife, with a focus on mammals and diving birds:

1. Land-based diving bird and marine mammal observation surveys in Bluemull Sound.
2. Subsea monitoring using turbine-mounted optical video cameras.

This report presents the results from manual review and analysis of a subset of all the subsea video footage from turbine-mounted cameras between March 2020 and March 2022. The focus of this analysis is on refining understanding for the likelihood and consequences of any nearfield interactions between operational turbines in the Shetland Tidal Array and diving birds, marine mammals and fish.

The report is provided in support of discharge of conditions attached to the following licences for the Shetland Tidal Array:

1. Marine Licence MS-00009110, issued by Marine Scotland Licensing Operations Team on behalf of the Scottish Ministers, under the Marine (Scotland) Act 2020.
2. Shetland Islands Council (SIC) Works Licence 2022/015/WL, issued by Shetland Islands Council under the Zetland County Council Act 1974.

3 Subsea video monitoring objectives and methods

3.1 Objectives

The objectives of Nova's programme of subsea video monitoring of turbines in the Shetland Tidal Array are set out in the Project Environmental Monitoring Plan (PEMP), and as follows:

1. To gather information on the nature and frequency of nearfield interactions between marine mammals, diving birds and their prey and the turbines to improve understanding for actual (versus modelled) collision risk.
2. To gather information on avoidance and evasion behaviour of marine mammals and diving birds around the operating turbines to enable refinement of modelled collision risk for the Project.
3. To identify any individuals interacting with turbines to species level (where possible) to refine understanding for collision risk.
4. To gather information for co-analysis with vantage point data to better understand the relationship between surface and subsea wildlife observations and, ultimately, collision risk.
5. To meet the requirements of condition 3.2.1.1 of Marine Licence MS-00009110 issued by Marine Scotland.
6. To meet the requirements of conditions 3 and 11 of Works Licence 2022/015/WL issued by Shetland Islands Council.

3.2 Cameras and configuration

Three cameras are attached to each of the first three deployed turbines (T1 to T3) in the Shetland Tidal Array, in the following configuration:

1. One attached to the side of the nacelle pointing towards the blades (TOP).
2. One attached to the top of the nacelle pointing towards the blades (SIDE).
3. One attached to the bottom of the nacelle pointing towards the seabed (DOWN).

The nine cameras utilized for T1, T2 and T3 have a horizontal field of view in water of 70^0, a sensitivity LUX rating of 0.001 and a resolution of 750 TV lines (TVL). They are colour submersible bullet charge-coupled device (CCD) cameras with a resolution of 412,000 pixels. Files are coded into MPEG and the capture rate is 16 Frames Per Second (FPS).

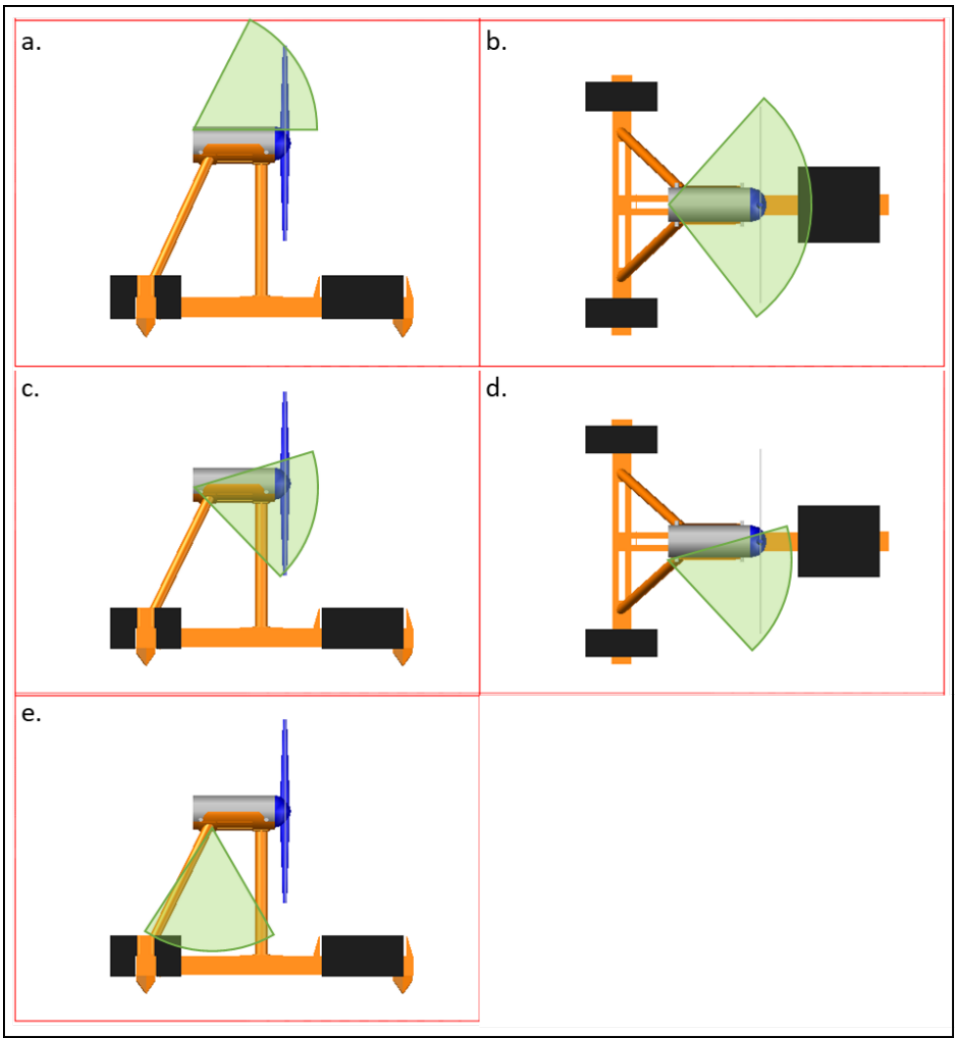

Figure 3-1 Configuration of turbine-mounted subsea cameras on T1, T2 and T3, showing (a & b) TOP camera looking towards the blades, (c & d) SIDE camera looking towards the blades and (e) DOWN camera looking towards the seabed. Figure is illustrative and not an accurate depiction of fields of view.

Figure 3-1 provides an indicative illustration of the location and approximate field of view of the three turbine-mounted cameras on T1 to T3.

A single high-definition camera is attached to T4 with a wider horizontal field of view in water than those on T1 to T3, higher sensitivity and superior resolution, as detailed below:

- High-definition colour images
- High resolution (412,000 pixels; 1000 TV lines)
- Fixed focus wide angle lens, with 65° diagonal and 90° horizontal field of view in water
- Light level sensitivity (0.1 lux colour)
- Focus distance from 10cm (min)

The camera on T4 is mounted to the nacelle, facing the turbine blades, as indicated in Figure 3-2.

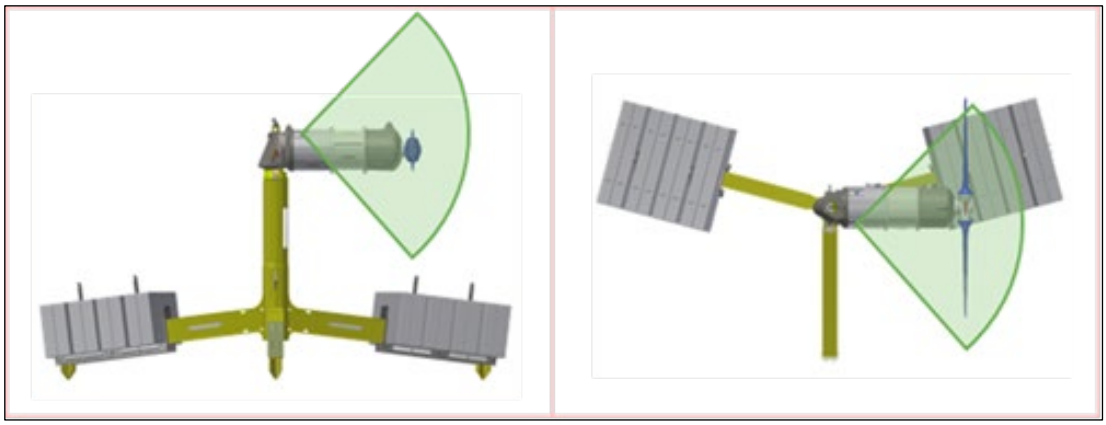

Figure 3-2 Subsea camera system for T4. Camera position and field of views is indicative only, for illustrative purposes. Cameras is attached to the turbine nacelle. Copyright © Nova Innovation 2022.

A UV light, directed onto the lens is used on the camera mounted on T4. This was trialled to determine its effectiveness in reducing biofouling to improve performance of the system. Further details are provided in Section 5.3.

3.3 Data retention and storage

The ten turbine-mounted cameras on T1 to T4 record continuously. The cameras operate 24-hours a day but are only effective when subsea light levels are sufficient (see Section 5 for further details).

Prior to the current reporting period (March 2020 to March 2022), a camera motion-detection system was used in conjunction with the turbine-mounted cameras. Only footage that was triggered based on differences of contrast of light and dark across successive frames was retained and stored. This motion-detection system was sensitive to all sources of movement including “false triggers” from biofouling on the nacelle and the movement of turbine blades (Nova Innovation, 2021a). As a result, this led to many 1000s of files which varied in length from just a few seconds up to the maximum length of 15-minutes (after which the trigger system was reset).

For the period covered by this report (March 2020 to 2022), the motion-trigger system was not used and instead all footage was retained in 15-minute clips, to explore whether this approach facilitates more efficient manual review and analysis. The removal of the motion-detection system means that the cameras generated video clips only. Previously, the camera motion-detection system generated a thumbnail image at the time it had been triggered. While the lack of these still images has not affected the ability to review the 2020-2022 footage, the examples presented in this report have been created from screenshots of paused video rather than stills which makes some of the images grainy.

Each 15-minute clip is stored as a separate MPEG video file with a unique code automatically assigned a time and date-stamp (in GMT). The resolution of stored video clips is reduced to make the data more manageable but this did not affect the ability of the reviewer to identify instances of mobile species in footage (R. Norwood, pers. comm). The video files are stored in a purpose-built cloud-based Amazon Web Service (AWS) video management system to facilitate efficient storage and easy access for manual review and analysis. The key features of this AWS-based system are:

- Long-term, secure storage of video data (historic and current).
- Secure, online access to stored video from remote locations.

- Organisation and indexing the video data to provide straightforward operator access to any camera and time-period to assist with manual analysis of the data and links to operational and other environmental data.

- Support for multiple real-time viewing of video streams, without over-burdening the limited network bandwidth at the Shetland Tidal Array sites.

The cloud-based system has a front-end portal which provides remote access capabilities. Users can extract samples of footage from the full dataset, filtering by date and time, as well as by specific turbines and camera positions (TOP, DOWN, SIDE), as illustrated in Figure 3-3. Users can also add tags to video clips to aid filtering and build analysis efficiencies.

a) Filtering footage by date.

b) Filtering footage by time.

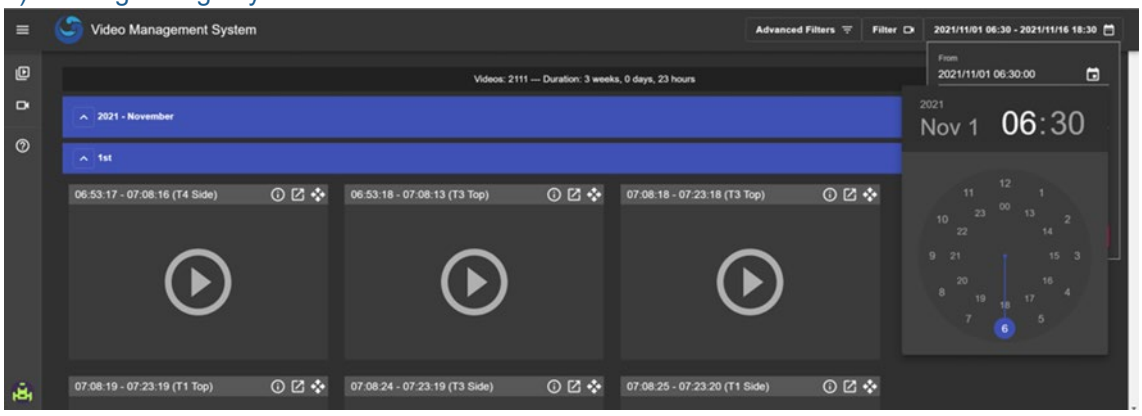

c) Filtering footage by camera.

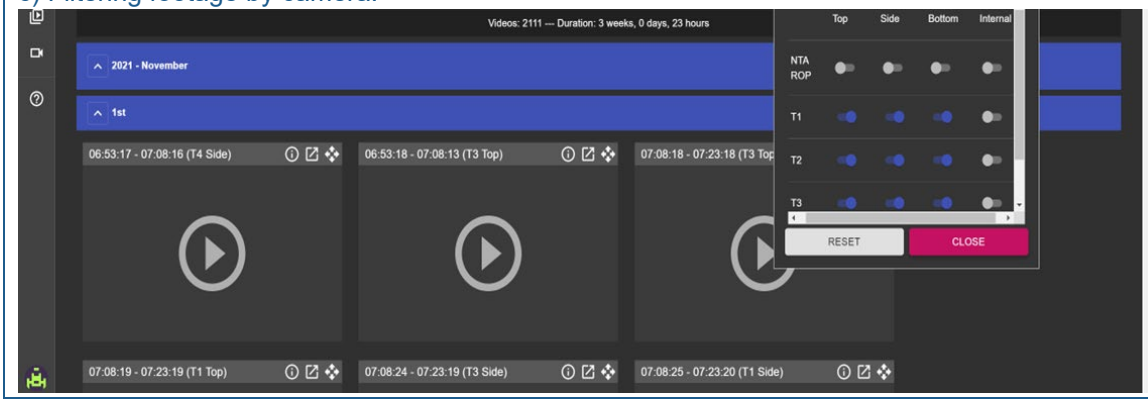

Figure 3-3 AWS-based system used to store and access video footage, showing ability to filter footage by a) date, b) time and c) camera.

4 Data analysis

4.1 Subset selection

A subset of video footage was selected for manual review and analysis from the full dataset gathered from turbine-mounted cameras between March 2020 and March 2022. A structured approach was used to select video samples so that when combined, they formed a subset of the full dataset which provided the following:

1. Coverage across all years, seasons, months and times of the day (daylight hours) between March 2020 and March 2022.
2. Coverage of the entire tidal cycle and all flow conditions at the site (0 to 3 m/s), including representative samples of periods when turbines were operating (> 0.8 m/s) and non-operating (< 0.8 m/s).
3. Coverage overlapping all times of land-based bird and mammal surveys in Bluemull Sound.
4. Coverage of times when land-based surveys were not conducted in Bluemull Sound, for example due to unsuitable conditions or the structure of survey effort.
5. Coverage of times when there was a theoretical enhanced potential for nearfield encounters between marine wildlife and operational turbines, as identified from the land-based survey data, and incidental cetacean sightings reported in Bluemull Sound.

In addition to the subset selected for systematic review and analysis, video footage from turbine-mounted cameras is routinely reviewed for surveillance of turbine performance. Detailed records of footage reviewed for this purpose are not kept for environmental monitoring reporting purposes. However, protocol requires that Nova personnel conducting these checks report any instances of diving birds or marine mammals observed in footage immediately to Nova's Environmental Manager for closer investigation[1].

Further details of the samples selected to collectively provide a representative subset of videos for systematic manual review and analysis are provided below.

Sample 1

- All video footage from all turbine-facing cameras corresponding to the times of the 2-hour land-based surveys, plus a 1-hour buffer either side of each survey.
- The design of the land-based surveys means that this sample by default provides even coverage across tidal states and seasons.
- Also enables contextualisation and cross-validation of the land-based survey data.
- Generated 4236 15-minute video files, comprising a total of 1,059 hours of footage for manual review.
- Full details of sample 1 are provided in Annex A.1.

[1] No diving birds or marine mammals have been observed during turbine performance surveillance of subsea video footage in the 8 years that Nova has been using turbine-mounted cameras.

Sample 2

- All footage from all turbine-facing cameras for entire days when high numbers of birds or mammals were recorded in land-based surveys (daylight hours only).
- Targets time of greater probability of nearfield encounters between turbines, and diving birds and marine mammals.
- Enables examination of the relationship between prey distribution (fish) and bird and mammal presence and behaviour at the site.
- Generated 1431 video files, comprising a total of 358 hours of footage for manual review.
- Full details of sample 2 are provided in Annex A.2.

Sample 3

- Footage from all turbine-facing cameras corresponding to reported sightings of cetaceans in Bluemull Sound, plus a 30-minute buffer either side of the sighting.
- Targets time of greater probability of nearfield encounters between turbines and cetaceans.
- Enables examination of the relationship between prey distribution (fish) and cetacean presence at the site.
- Generated 74 video files, comprising a total of 18.5 hours of footage for manual review.
- Details of sample 3 are provided in Table 4-1.

Table 4-1 Details of video sample 3 defined by the times of incidental sightings of cetaceans in Bluemull Sound.

Date and time of sighting	Reason for selection	Time span of sample	Number of videos	Total length of footage
10/07/21 13:33 to 13:42	Pod of Orca transited the array area	12.30 – 14.45	38	9.5 hours
12/08/21 16:20	Fin whale transited the array area	15.20 – 17.20	36	9 hours

Sample 4

- Footage from T4 camera for entire days when land-based surveys were not conducted (daylight hours only)[2].
- Provides additional overall coverage, including periods of poor conditions unsuitable for land-based surveys.

[2] Initially the proposed selection criteria for this sample were footage from all cameras (T1 to T4) restricted to within 3 months of turbine installation or maintenance, to limit the effects of biofouling and maximise the quality of selected footage. However, the UV light used to manage biofouling on the camera on T4 was so successful that it was decided instead to limit this sample to T4 footage, but not to apply the time-limit criteria. This strategy enabled better year-round coverage of sample 4 and hence the whole subset.

- Generated 838 separate video files, comprising a total of 209.5 hours of footage for manual review.
- Details of sample 4 are provided in Annex A.3.

Combined, these four samples generated a subset of 6,579 individual videos each of 15 minutes in length resulting in 1,645 hours of footage for manual review and analysis.

4.2 Manual review and analysis

One individual conducted the review and analysis of the video footage. The subset of 6,579 video files (1,645 hours of footage) were manually reviewed at speed x 4-6 to identify any occurrences and key behaviours of mobile species. Each video file was reviewed for any occurrences of mobile marine species. If mobile species were present, the full video clip was scrutinised in greater detail, including at slow speeds (speed x 0.1) to determine the species identity and any key behaviours exhibited, as well as the occurrence and outcome of any nearfield interactions with turbine rotors. One of the following seven categories was applied to each video.

1. Individual fish
2. Fish 2 - 5: Small groups of up to five fish at one time present in the video.
3. Fish > 5: Large groups of greater than five fish at one time present in the video.
4. Marine mammals: Presence of a pinniped or cetacean in the video.
5. Diving birds: Presence of a diving bird in the video.
6. Other mobile species: Presence of other mobile species in the video (e.g., macro- and mega-plankton).
7. Nothing: no mobile species in the video.

The date and time of any video clip in which mobile species were observed was recorded and one of the following six tidal periods assigned:

1. Increasing flood: 2-4 hours after low water (LW), starts immediately after LW slack in Bluemull Sound.
2. Maximum flood: 4-6 hours after LW.
3. Decreasing flood: 0-2 hours after high water (HW), starts 1.5 hours before and straddles HW slack in Bluemull Sound.
4. Increasing ebb: 2-4 hours after HW, starts around 30 minutes after HW slack in Bluemull Sound.
5. Maximum ebb: 4-6 hours after HW.
6. Decreasing ebb: 0-2 hours after LW, starts 2 hours before LW slack in Bluemull Sound.

These tidal periods are defined according to local conditions in Bluemull Sound and derived from Nova's tidal model, as set out in Figure 4.1.

	HIGH WATER						**LOW WATER**						**HIGH WATER**	
Time after HW/LW	6th hr	1st hr	2nd hr	3rd hr	4th hr	5th hr	6th hr	1st hr	2nd hr	3rd hr	4th hr	5th hr	6th hr	1st hr
Bluemull slacks			HW SLACK						LW SLACK					
Simplified slacks			HW SLACK						LW SLACK					
Relative speed (R.O. Twelfths)	3	2	1	1	2	3	3	2	1	1	2	3	3	2
Direction	FLOODING			EBBING						FLOODING				
Tidal Periods	MF	**Decreasing Flood**		**Increasing Ebb**		**Maximum Ebb**		**Decreasing Ebb**		**Increasing Flood**		**Maximum Flood**		DF

Figure 4-1 The six tidal periods within the tidal cycle in Bluemull Sound.

The removal of the motion-detection system (described in Section 3.3) meant that the camera system between 2020 and 2022 generated video clips only. Previously, the camera motion-detection system also generated a thumbnail image at the time that the camera was triggered. While the lack of these still images has not affected the ability to review the 2020-2022 footage, the examples presented in this report have been created from screenshots of paused video rather than stills which makes some of the images grainy.

5 System performance

5.1 Overall performance

The ten turbine-mounted cameras on T1 to T4 operate 24 hours a day but are only effective for monitoring nearfield interactions between turbines and mobile species during periods of sufficient light conditions. The typically very good and often exceptional year-round clarity of the seas around Shetland means optical cameras continue to be an effective, robust, reliable and low-cost solution to monitor nearfield interactions between turbines and mobile species.

The simple design of the camera system, incorporated into the design of the turbine themselves, minimizes technical faults and system failure, limiting the potential for data gaps. The system is highly sensitive and image quality is good from sunrise to sunset, enabling any mobile species present in footage to be identified. Daylight hours are a key factor affecting the effectiveness of the approach, particularly during winter months when daylight hours average between 6 and 7 hours[3]. Daylight hours during summer average between 17 and 18 hours, so are less limiting.

Current speed does not affect the image quality, though weather conditions (e.g., winter storm events) and particularly intense plankton blooms can reduce image quality. As reported previously (Nova innovation, 2021a) biofouling on cameras and turbines affected triggering of the motion-detection system and image quality (also detailed in Section 3.3). During the current reporting period Nova has trialled a new approach to managing biofouling on the camera used on the fourth installed turbine (T4), further details of which are provided in Section 5.3.

All turbine-mounted cameras capture footage at a resolution 412,000 pixels. From October 2015 and March 2020, when only three turbines were installed in the Shetland Tidal Array, this resulted in a total video footage dataset in excess of 3 TB (Nova Innovation, 2021a).

The resolution of stored video clips has been reduced since March 2020 to improve efficiencies in data transmission, storage and management, since the number of turbines in the array and associated generation of video footage is increasing. The reduction in the resolution of stored video files has not affected the ability of the reviewer to identify instances of mobile species in footage (R. Norwood, pers. comm).

5.2 Camera fields of view and coverage

The use of three cameras per turbine on T1 to T3 provides good spatial coverage of the nearfield environment around turbines, including useful information on fine-scale occupancy patterns and vertical movement of fish around the turbines in relation to tidal flow.

Combined, the two cameras facing the turbine blades (TOP and SIDE) on each of T1 to T3 provide approximately 60-65% coverage of the rotor-swept area. This has been estimated from combined images of the two fields of view using Computer-Aided Design (CAD), shown in Figure 5-1.

[3] Based on NOAA solar calculator http://www.srrb.noaa.gov/highlights/sunrise/calcdetails.html

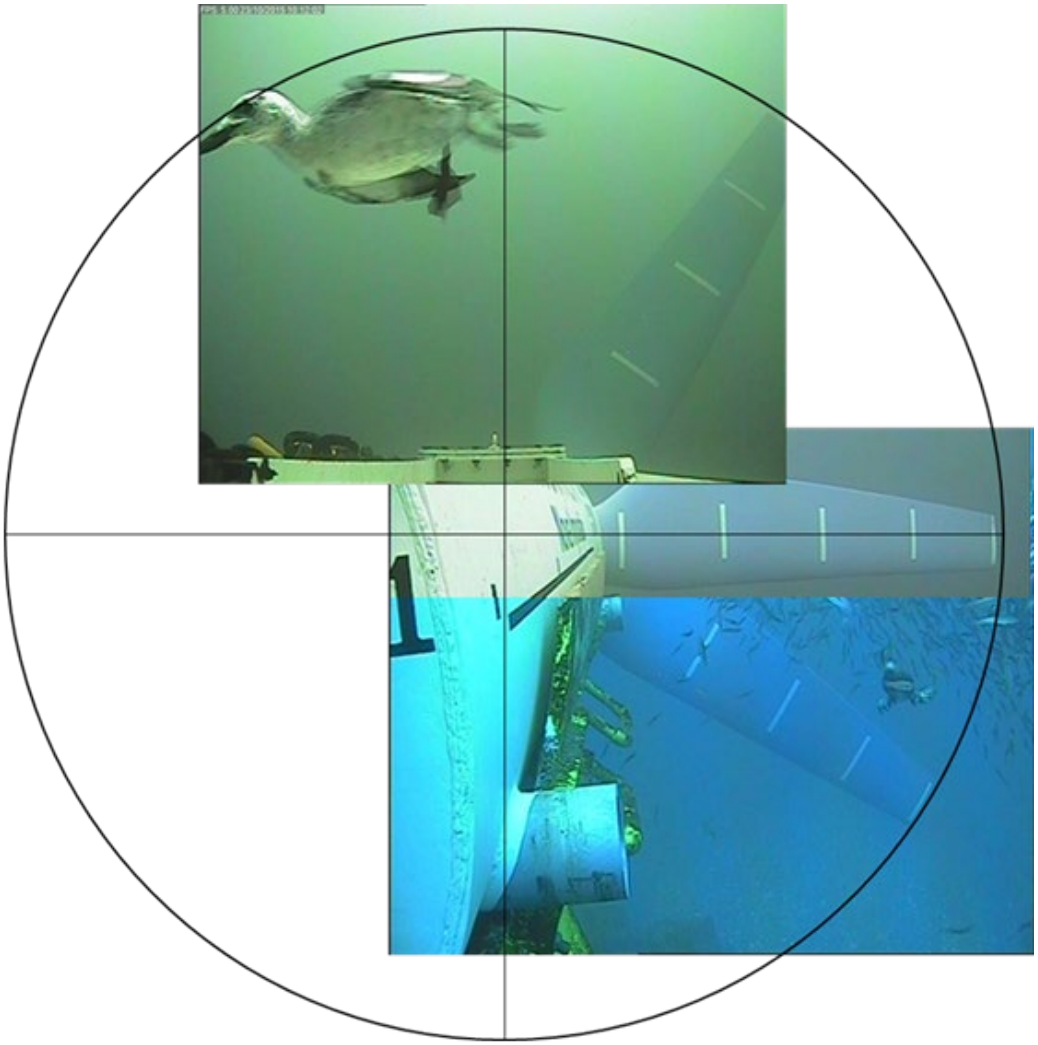

Figure 5-1 Field of view of TOP and SIDE cameras mounted on T1, T2 and T3 in the Shetland Tidal Array. *Copyright © Nova Innovation 2022.*

The rotor swept area that is within the field of view of the camera on T4, based on CAD modelling, is indicated in Figure 5-2, estimated to be 30-35% of the rotor swept area.

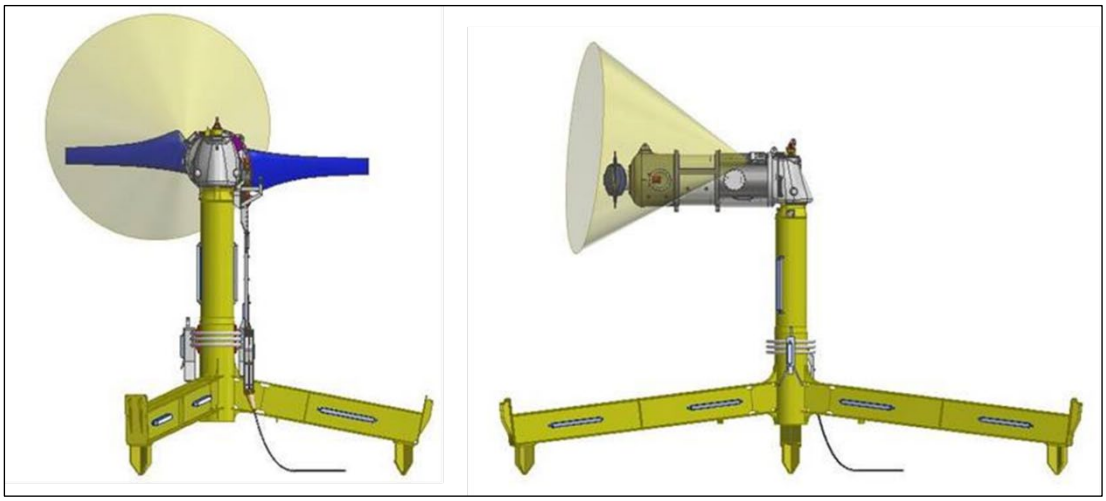

Figure 5-2 Field of view of the subsea camera mounted on T4.

5.3 Biofouling

The quality of video footage generally degrades over time due to biofouling on the lenses of the turbine-mounted cameras. The rate of biofouling on cameras and turbines varies with time of year, but it generally takes several months before images are completely obscured by biofouling and footage is rendered unusable. Camera lenses are routinely cleaned during all turbine maintenance operations to limit the effects of biofouling, while the use of multiple cameras on multiple turbines reduces the overall effects of biofouling on dataset continuity

Figure 5-1 shows the change in image quality on the side-mounted cameras on turbines 1 (T1) and 3 (T3) over time through biofouling, between January and June 2021. It is only in the final images for June 2021 that images are completely obscured by biofouling.

a) January 2021

b) February 2021

c) March 2021

d) April 2021

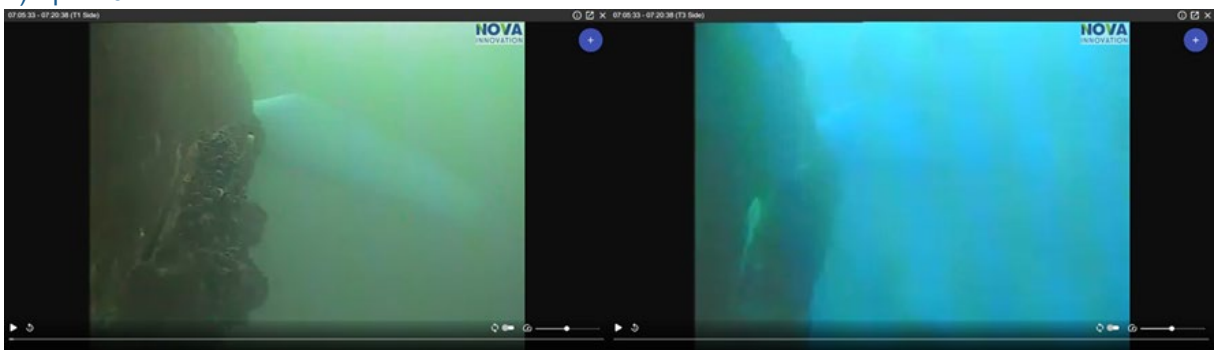

e) May 2021

f) June 2021

Figure 5-1 Monthly images showing the change in image quality on the side-mounted cameras on T1 (left) and T3 right) over time through biofouling, between a) January 2021 and f) June 2021.

During this reporting period a new approach to managing biofouling on the camera lens of the fourth installed turbine (T4) has been trialled. An Ultra-Violet (UV) light was mounted to the nacelle of T4 prior to its installation in October 2020 and directed onto the camera lens. Results of this trial indicate that the rate of biofouling on the T4 camera lens UV light has been lower than on the other three turbines.

Figure 5-2 shows how the image quality of the camera on T4 degraded due to biofouling between March 2021 and March 2022. Some obstruction of the lens can be seen in June 2021 which is not present in September 2021. This is likely to be caused by the growth of mussels on the nacelle and camera-housing, rather than biofouling the lens itself, which can still be seen to be free of growth. Large settlements of mussels occur from time to time on the turbine nacelles, reaching a critical mass before being dislodged by the strong tidal flows. In this case, the UV light appears to have prevented mussel larvae from settling onto and colonising the camera lens.

a) March 2021

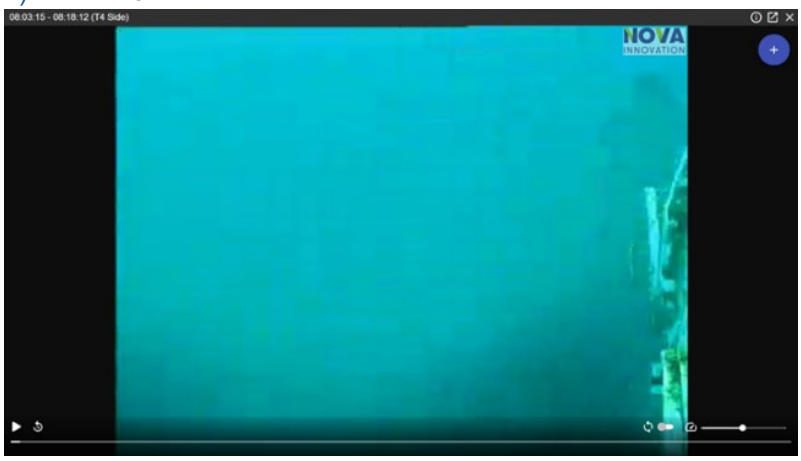

b) June 2021

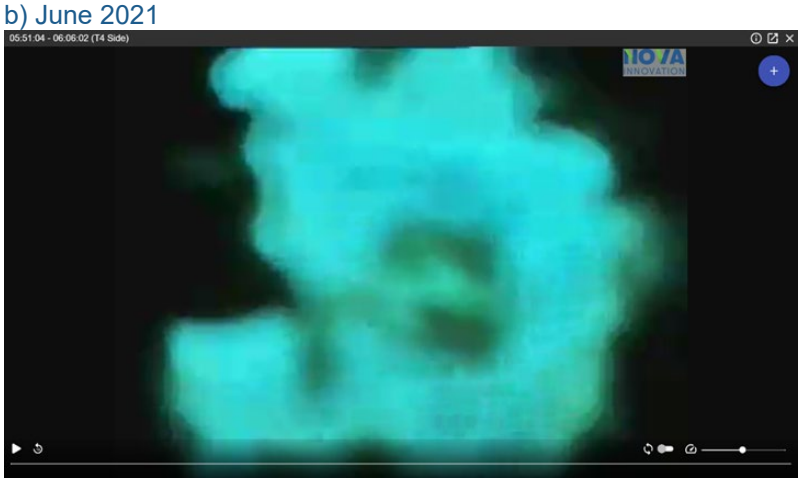

c) September 2021

d) December 2021

e) March 2022

Figure 5-2 Images showing the change in image quality on the side-mounted camera on T4 over time through biofouling, between a) March 2021 and e) March 2022.

Scanning images for mobile species generally becomes harder as biofouling progresses. While partial biofouling of cameras does not prevent the ability to detect mobile species or observe their behaviour around the turbines, the contrast between objects in the water and the image background becomes reduced. This makes it harder to determine what a picture shows without closer scrutiny, adding to the time taken for manual review, which can add considerable time to processing and analysis of footage.

Levels of biofouling which prevented the ability to scan images for mobile species were seen in approximately 40% of the footage reviewed. In the remaining footage subject to biofouling, it was still possible to identify mobile species. Figure 5-3 shows some examples of such videos partially affected by biofouling, but in which fish can still be seen.

Figure 5-3 Examples of biofouling not obstructing the ability to identify fish observations in video footage.

6 Results

6.1 Total video dataset and subset metadata

Between March 2020 and March 2022 approximately 28,000 hours of footage were recorded from turbine-mounted cameras at the Shetland Tidal Array. Details of the four samples extracted from the full dataset for the systematic manual review and analysis detailed in this report are provided in Table 6-1. For each sample, the total number of video files and the total combined length of these files are provided. An estimation is also provided of the time taken by the reviewer to systematically check all the files for occurrences of marine mobile species, using the methods detailed in Section 4.2. Amalgamated data for the full video footage subset presented in this report are detailed in the final column.

Table 6-1 Details of samples comprising the subset of video footage extracted for systematic manual review and analysis. Data for the full subset are in bold in the final column.

	Sample 1	Sample 2	Sample 3	Sample 4	Total subset
Sample summary	All land-based surveys	Bird/mammal high sightings	Cetacean sightings	T4 additional days	**All samples combined**
Number of video files	4,236	1,431	74	838	**6,579**
Length of footage	1059 hours	358 hours	18.5 hours	209.5 hours	**1,645 hours**
Review time	200 hours	70 hours	4 hours	40 hours	**314 hours**

The subset of 1,645 hours of video footage, comprising 6,579 separate video files represents around 6% of the approximately 28,000 hours of footage gathered between March 2020 and March 2022. This manual review and analysis took almost 320 person hours to complete.

Between March 2020 and March 2022 video footage was also continuously reviewed as part of turbine performance surveillance by Nova (see Section 4.1 for more details). Other than reporting any incidental sightings of birds or mammals, records and metadata on the footage reviewed for this purpose are not kept. Therefore a greater proportion than 6% of the full 28,000 hours of video footage has been reviewed between March 2020 and March 2022.

6.2 Overview of sightings in reviewed footage

The content of the subset of 6,579 video files following manual review is summarised in Table 6-2. This includes the number and percentage of files in each sample containing mobile species including fish, diving birds and marine mammals and other species such as jellyfish. Details are also provided of files for which no mobile species were observed. Amalgamated data for the full subset presented in this report are detailed in the final column.

Table 6-2 Content of reviewed video files, including observations of fish, diving birds and jellyfish. Figures are total number of video files with corresponding % of all files in italics. Data for the full subset are in bold in the final column.

	Sample 1	Sample 2	Sample 3	Sample 4	Full subset
Fish	56 *1.32%*	11 *0.77%*		2 *0.24%*	**69** ***1.05%***
Diving birds	1 *0.02%*				**1** ***0.02%***
Jellyfish	8 *0.19%*				**8** ***0.12%***
All mobile species	65 *1.53%*	11 *0.77%*		2 *0.24%*	**78** ***1.19%***
Nothing	4171 *98.47%*	1420 *99.23%*	74 *100%*	836 *99.76%*	**6501** ***98.81%***
Total	4,236 *100%*	1431 *100%*	74 *100%*	838 *100%*	**6,579** ***100%***

Mobile species were observed in 1.19% of reviewed footage (78 video files). Animals observed included fish, jellyfish and one instance of a diving bird. In the 98.81% of footage in which no mobile species were observed, some clips were obscured due to the levels of biofouling on cameras lenses. The marine mobile species observations that were recorded are further detailed in the following sections, including stills from corresponding videos.

6.3 Fish

The majority of observations of marine mobile species in the reviewed footage (88.5%, or 69 video files from a total of 78 containing observations) were species of fish. Almost all fish observed were individuals or groups of varying sizes of genus Pollachius, comprising mostly saithe, *Pollachius virens* and occasionally Atlantic pollock, *Pollachius virens*. Details of these 69 observations by fish group size are provided in Table 6-3.

Table 6-3 Fish observations in the reviewed video subset. Figures are the total number of video files with corresponding % of all files containing fish (N=69) in italics. Data for the full subset are in bold in the final column. For full details see Annex B.

	Sample 1	Sample 2	Sample 4	Full subset
Individual fish	3 *5.36%*	1 *9.09%*		**4** ***5.80%***
Small group 2 - 5 individuals	8 *14.28%*			**8** ***11.59%***
Large group > 5 individuals	45 *80.36%*	10 *90.91%*	2 *100%*	**57** ***82.61%***
All fish	56 *100%*	11 *100%*	2 *100%*	**69** ***100%***

Most fish observations (> 82%) were large groups, seen swimming or milling around the turbines. There were very few observations of individual fish or small groups of less than 5 individuals. Figures 6-1 to 6-11 provide some examples of typical observations of individual fish and small and large groups. For each image, details of the camera on which the image was captured is provided, as well as details of the time and any key observations. All images are created from screenshots of paused video, rather than stills which makes some of the images grainy.

Figure 6-1 T4 SIDE 11/08/2021 12:13-12:28. Individual saithe (*Pollachius virens*).

Figure 6-2 T4 SIDE 30/09/2021 07:19-07:34. Individual saithe (*Pollachius virens*).

Figure 6-3 T4 SIDE 27/08/202 13:29-13:44. Individual saithe (*Pollachius virens*). The stationary turbine rotor can be seen in the background.

Figure 6-4 T4 SIDE 30/07/2021 14:52-15:07. Individual fish, possibly the same saithe in Figure 6-3 approaching the stationary turbine rotor.

Figure 6-5 T1 TOP 27/10/2020 06:04-06:19. Individual fish, *Pollachius sp.* Despite some biofouling on the cameras lens the fish can still be observed.

Figure 6-6 T1 SIDE 01/12/2020 10:37-10:52. Individual fish, likely to be *Pollachius sp.* Despite some turbidity in the water the fish can still be observed.

Figure 6-7 T4 SIDE 05/10/2021 09:31-09:46. Group of fish, *Pollachius sp.* Milling around the turbine. The stationary turbine rotor can be seen in the background.

Figure 6-8 T4 SIDE 09/10/2020 09:48-10:03. Group of fish, Pollachius sp. milling around the turbine. The stationary turbine rotor can be seen in the background.

Figure 6-9 T4 SIDE 11/08/21 11:58-12:13. Group of fish, Pollachius sp. milling around the turbine. More fish than are seen in this still were observed in the video, moving in and out of the frame. Turbine rotor cannot be distinguished in image, but review of video footage confirmed the turbine was not operating.

Figure 6-10 T4 SIDE 13/09/21 14:40-14:55. Group of fish, Pollachius sp. milling around the stationary turbine. Despite some biofouling on the cameras lens the fish can still be observed.

Figure 6-11 T1 SIDE 05/10/2021 15:46-16:01. Group of fish. Despite some biofouling on the cameras lens the fish can still be observed, most likely to be Pollachius sp.

Comprehensive details of all 69 fish observations in the reviewed footage by date, time and tidal state are provided in Annex B. Table 6-4 provides a monthly breakdown of the 69 observations of fish in the reviewed video by fish group size. This demonstrates that fish were generally observed between July and October with very few outside of this time.

Table 6-4 Fish occurrence in subsea video by month. Figures are the total number of video files with corresponding % of all files containing fish (N=69) in italics.

	Jan	Feb	Mar	Apr	May	Jun	Jul	Aug	Sep	Oct	Nov	Dec
Individual fish								1 *1.45%*	2 *2.90%*	1 *1.45%*		
Small group 2 - 5 individuals	1 *1.45%*								4 *5.80%*	2 *2.90%*		1 *1.45%*
Large group > 5 individuals							12 *17.39%*	8 *11.59%*	13 *18.84%*	22 *31.88%*	2 *2.90%*	
All fish	1 *1.45%*						12 *17.39%*	9 *13.04%*	19 *27.54%*	25 *36.23%*	2 *2.90%*	1 *1.45%*

Individuals and groups of fish were generally observed aggregating around the turbines, either swimming or grazing on epibiota on the nacelle. The vast majority of fish sightings (97.26%) were

observed when the turbine rotors were stationary, at flow speeds of 0.8 m/s or less. On just two occasions, representing 2.74% of all fish sightings, a group of fish (genus Pollachius) were observed in the T4 camera when the turbine rotor could also be seen rotating. On both occasions, the group were close to the camera and appeared to be sheltering from the main flow behind the turbine nacelle. Both these instances were on 19/08/2021, one on the increasing flood tide and anther on the maximum flood. A breakdown of the 69 occurrences of fish in the reviewed video by each of the six tidal periods assigned to video files is provided in Table 6-5, with full details in Annex B.

Table 6-5 Fish occurrence in subsea video by tidal period. Figures are percentages (%) of all fish occurrences N=69).

	Increasing flood	Maximum flood	Decreasing flood	Increasing ebb	Maximum ebb	Decreasing ebb
Individual fish			4 *5.79%*			
Small group 2 - 5 individuals			3 *4.35%*			5 *7.25%*
Large group > 5 individuals	6 *8.70%*	9 13.04%	18 *26.09%*	1 1.45%		23 *33.33%*
All fish	**6** ***8.70%***	**9** ***13.04%***	**25** ***36.23%***	**1** ***1.45%***		**28** ***40.58%***

Over 76% of fish occurrences in subsea video were on the decreasing ebb and flood tides (the tidal periods prior to low and high water slack, respectively). Occurrences on the maximum flood tide were relatively high, though the turbine rotors were only seen to be moving in two of these videos, both on the same day (19/08/2021 – see Annex B for full details). The discrepancy in other videos may in part be to the known variation between modelled tidal data and observed flow in Bluemull Sound and the particularly complex nature of the timing of high water slack, most likely due to the effects of meteorological conditions such as storm surges not included in the hydrodynamic model (as reported in Nova Innovation, 2021a).

6.4 Top predators

A single European shag (*Gulosus aristotelis*) was the only top predator observed in the subset of video footage reviewed. One individual was captured on T4 side camera 30th September 2021. The tidal state at the time was 'decreasing ebb' just before the time of low water slack in Bluemull Sound. As would be expected on this state of the tide, the turbine blades were stationary. Full details are provided in Table 6-6 and a still from the footage shown in Figure 6-10.

Table 6-6 Details of European shag (*Gulosus aristotelis*) sighting in subsea video on 30th September 2021.

Camera	Time	Tidal period	Turbine operating?	Key observations
T4 Side	11:04 - 11:19	Decreasing ebb	N	Shag swims up quickly from below past camera

Figure 6-12 T4 SIDE 30/09/2021, 11:04-11:19. European shag (*Gulosus aristotelis*). Turbine rotor cannot be distinguished in image, but review of the video footage confirmed that the turbine was not operating.

6.5 Other species

The only other mobile species observed in the subset of video footage reviewed was Lion's mane jellyfish (*Cyanea capillata*). All these observations occurred in August and September; the time of year when this species is present in UK waters. All observations were also on flood tides when the flow is from north to south through Bluemull Sound. Details of these observations are provided in Table 6-7 and stills from the footage shown in Figure 6-11.

Table 6-7 Details of lion's mane jellyfish (*Cyanea capillata*) observations in subsea video.

Camera	Date	Time	Tidal state
T4 Side	24/08/2020	11:53 - 12:08	Increasing flood
T4 Side	24/08/2020	12:08 - 12:23	Increasing flood
T4 Side	24/08/2020	15:23 - 15:38	Decreasing flood
T4 Side	25/08/2020	11:25 - 11:40	Increasing flood
T4 Side	25/08/2020	13:40 - 13:55	Maximum flood
T4 Side	31/08/2020	09:24 - 09:39	Maximum flood
T4 Side	10/09/2020	11:33 - 11:48	Increasing flood

Figure 6-13 T4 SIDE 25/08/2020 11:25-11:40. Lion's mane jellyfish (*Cyanea capillata*).

7 Discussion

This report presents the analysis of subsea video footage gathered between March 2020 and March 2022 from cameras mounted to the four turbines currently installed in the Shetland Tidal Array, Bluemull Sound. This forms a core part of Nova Innovation's programme of environmental monitoring for the array.

Additional reports present the results of the complementary land-based surveys of birds and mammals conducted in Bluemull Sound between March 2020 and March 2022 (Nova Innovation, 2022a; Holmes, 2022). Key findings from the surveys are cross-referenced in this discussion to facilitate interpretation of the mobile species observations in the subsea video footage reviewed for this report. This enables evidence-based understanding of the likelihood that diving birds and marine mammals might interact with turbines in the Shetland Tidal Array, and key influencing factors. The information presented in this and the additional complementary reports has enabled new insights into bird and mammal collision risk, further building on learning since the Shetland Tidal Array monitoring programme commenced in November 2010.

This report demonstrates that subsea video using turbine-mounted cameras continues to be a highly effective method for gathering information on the behaviour and nearfield interactions of mobile species around turbines in the Shetland Tidal Array. This is due to the water clarity at the site and the relative simplicity of the approach which has enabled avoid some of the technical issues and failures associated with more complex monitoring approaches to be avoided.

A subset of 1,645 hours of video footage, comprising 6,579 separate video clips from turbine-mounted cameras has been systematically reviewed and analysed in this report. This represents around 6% of the approximately 28,000 hours of footage gathered between March 2020 and March 2022. An additional, but unquantified subset of the total video dataset for this period has been reviewed during routine surveillance of turbine performance. Detailed records of footage reviewed for this purpose are not kept for environmental monitoring reporting purposes, but any instances of diving birds or marine mammals observed in footage are recorded. There were no such observations during turbine performance surveillance conducted between March 2020 and March 2022.

Mobile species were observed in 1.19% of the reviewed subset of footage (78 video files), representing around 2% of all footage in which levels of biofouling did not prevent the ability to scan images for mobile species. The mobile species observed in footage were fish (88.5% of mobile species observations), jellyfish (10.1% of mobile species observations) and a single observation of a diving bird (European shag, *Gulosus aristotelis*).

No collisions or near misses between fish, diving birds or marine mammals were observed in any of the footage reviewed. Only 2 videos from the 6,579 reviewed (0.03%) contained mobile species at times when the turbines were operating (i.e., blades rotating). On both occasions, these were shoals of fish of genus Pollachius which were seen to be sheltering from the main tidal flow behind the turbine nacelle and were not in proximity to the rotating blades.

Fish of genus Pollachius were the most frequently observed and abundant species in the subset of footage examined. Individual fish and groups comprising mostly saithe, *Pollachius virens* and the occasional Atlantic pollock, *Pollachius virens* were observed aggregating around the turbines or passing through the camera's fields of view. Fish were mostly observed between July and October with very few seen in footage outside of these months.

Other than the two observations referred to above, fish were only seen around the turbines when the rotors were stationary. Over 76% of fish occurrences in subsea video were on the decreasing ebb and flood tides, prior to low and high water slack, respectively. Data from Nova's land-based surveys have shown that numbers of the two most commonly occurring species in Bluemull Sound, black guillemot and European shag are greater during slower flow speeds around low and high water slack in Bluemull Sound (Nova Innovation, 2022a). Waggitt et al (2016) similarly observed these two species favouring low-velocity currents around times of low and high water slack when foraging in tidal sites, thought to reflect the high energetic costs of diving under high velocity conditions (Butler and Jones, 1997; Heath and Gilchrist, 2010). The data from the subsea video monitoring indicates that the overlap in habitat utilisation of the area around the turbines by predators at times of slow tidal velocity coincides with times when fish are more likely to be present. This suggests that in addition to a high energetic cost of diving under high velocity conditions, the foraging behaviour of predators may be driven by the influence of tidal velocity on the distribution of their prey.

The only top predator observed in the video footage was a single observation of a European shag, *Gulosus aristotelis* recorded in September 2021 on a decreasing ebb tide, close to the predicted time of low water slack in Bluemull Sound. This further indicates a preference for predator foraging in Bluemull Sound during times of slower velocity conditions. As discussed above, this may be due to the lower energetic costs of foraging in such conditions, the presence of prey, or a combination of the two factors. Whatever the driver, such behaviour significantly reduces the likelihood of top predators interacting with operational turbines, indicating very low collision risk.

The results presented in this report build on the findings of previous monitoring reports for the Shetland Tidal Array (Nova Innovation 2021a; 2021b). The monitoring continues to indicate an extremely low likelihood of nearfield encounters between marine mobile species and operational turbines and therefore a very low risk of collisions with turbine rotors.

8 Next steps

8.1 Ongoing monitoring

The monitoring programme for the Shetland Tidal Array including the use of turbine-mounted cameras to monitor nearfield interactions between marine wildlife and turbines will continue. Over coming months this will include a period of further array expansion, as two more 100 kW Nova M100 turbines are installed in Bluemull Sound (T5 and T6). A single subsea camera like that mounted on T4 will be used to provide nearfield monitoring capabilities for T5 and T6.

Ongoing monitoring will add to the contribution the project has already made to improving knowledge on the environmental effects of tidal turbines and arrays and on the development of efficient, reliable and cost-effective monitoring solutions for tidal energy projects. In line with the approach set out in the Project Environmental Monitoring Plan (Nova Innovation, 2022a), the monitoring will be kept under review to ensure it remains necessary, proportionate and fit for purpose. This includes further refining methods to continue to focus on key outstanding uncertainties and knowledge gaps as the array is expanded and reconfigured. It also includes considering phasing out of monitoring that is no longer proportionate to the growing knowledge of project impact risk.

8.2 Automated video processing

The lack of automated tools or algorithms to process the subsea video footage from the turbine-mounted cameras means it is currently reviewed manually. This is resource intensive, illustrated by the review times for the video subset analysed in this report (Section 6.1) which limits how much of the full dataset can be analysed. Nova considers that the 6% presented in this report, alongside the additional footage reviewed during turbine performance surveillance is realistic, reasonable and proportionate to the risk of project impacts on marine mammals and diving birds. However, any measures to improve efficiencies in video data processing and review would be beneficial and enable analysis of a greater proportion of the full dataset in any reporting period.

To investigate the potential to introduce such efficiencies, Nova is currently working on a proof of concept project to investigate the development of machine learning and algorithms to automatically filter footage and reduce manual processing. The tools under development will be evaluated on a pilot dataset of the subsea video data acquired from the turbine-mounted cameras in the Shetland Tidal Array, as well as similar data that will be acquired from Nova's turbines to be deployed in Petit Passage in the Bay of Fundy, Canada.

If the proof of concept is successful, Nova will investigate the use of such tools and algorithms to streamline future subsea video data processing and analysis for the Shetland Tidal Array.

8.3 Dissemination of learning and evidence transfer

Sharing learning and experience from environmental monitoring of the Shetland Tidal Array is important to Nova. It is critical in facilitating the development of best practice for cost-effective environmental monitoring of tidal energy projects and the sustainable development of the sector and for improving access to information on tidal energy to the general public. In addition to the formal monitoring reports provided to MS-LOT and Shetland Islands Council, information from the environmental monitoring programme for the Shetland Tidal Array has been shared via the following mechanisms:

1. Key results and lessons learnt have been published the US 2020 "State of the Science" report dedicated to examining the environmental effects of marine renewable energy technologies (Copping & Hemery, 2020). This 300-page report remains the most comprehensive international analysis to date on the issue.

2. Monitoring results and key learning have been shared and presented at UK and international workshops, conferences and seminars, including most recently at the Environmental Interactions of Marine Energy (EIMR) 2022 and the International Conference on Ocean Energy (ICOE) 2022.

3. The environmental monitoring programme, including footage from subsea video cameras, have featured on UK national television, including BBC One Countryfile in June 2021.

4. Results have been shared in an accessible format for the general public in reports produced as part of the multi-partner £20million project Enabling Future Arrays in Tidal (EnFAIT) led by Nova (e.g., EnFAIT, 2022).

5. The environmental monitoring programme and its key findings are regularly promoted using social media channels, including to coincide with global initiatives such as COP26, World Oceans Day and World Earth Day.

6. Key findings and lessons learnt have been incorporated into key consenting and regulatory guidance documents, including a series of technical, topic specific Information Notes produced by the Welsh Government to provide a shared understanding of how the best available science and evidence is currently applied to key consenting issues[4].

7. Results from the environmental monitoring of the Shetland Tidal Array was used as part of the evidence base in applications for permits and the design of the environmental monitoring programme for Nova's 1.5 MW project in the Bay of Fundy, Canada.

Opportunities to further develop and expand the dissemination and transfer of knowledge and learning from the Shetland Tidal Array will continue to be explored and developed. This includes opportunities to combine evidence and knowledge from the Shetland Tidal Array with that gained from environmental monitoring of Nova's other tidal energy projects, such as the Nova Tidal Array in Petit Passage, Canada. This is anticipated to deliver further benefits by improving the evidence base on the environmental effects of tidal stream energy, de-risking and accelerating consenting, and reducing the cost of monitoring for the tidal sector.

[4] See https://gov.wales/marine-renewable-energy-environmental-information-notes

9 References

Butler BJ and Jones DR (1997) Physiology of diving of birds and mammals. Physiological reviews, 77(3): 837-899.

Copping AE & Hemery LG (2020). OES-Environmental 2020 State of the Science Report: Environmental Effects of Marine Renewable Energy Development Around the World. Report for Ocean Energy Systems (OES). doi:10.2172/1632878.

EnFAIT (2022). Enabling Future Arrays in Tidal. Year 5 Environmental Monitoring Report. pp21.

Heath JP and Gilchrist HG (2010) When foraging becomes unprofitable: energetics of diving in tidal currents by common eiders wintering in the Arctic. Marine Ecology Progress Series, 403: 279-290.

Holmes LM (2022). Understanding diving seabird behaviour in tidal stream environments. Dissertation submitted in partial fulfilment of the requirements for the degree of Master of Science (MSc) in Marine Environmental Protection, Bangor University. Submitted to ICES Journal of Marine Science.

Nova Innovation (2021a). Shetland Tidal Array Monitoring Report: Subsea video monitoring. EnFAIT-0364 Version 4.0. pp76.

Nova Innovation (2022a). Shetland Tidal Array Project Environmental Monitoring Plan (PEMP). EnFAIT-0362 Version 6.0. pp58.

Nova Innovation (2022b). Shetland Tidal Array Monitoring Report: Land-based bird and mammal surveys. EnFAIT-0394. pp26.

ORJIP (2020). Offshore Renewables Joint Industry Programme, Ocean Energy: Wave and Tidal Stream Critical Evidence Needs. Report to: The Crown Estate, Crown Estate Scotland, Marine Scotland, Welsh Government, Scottish Natural Heritage and Natural Resources Wales. pp37.

Vezza R (2019). An anti-biofouling strategy for operators: A systems approach for the tidal energy industry. Thesis is submitted in partial fulfilment of the requirements for the degree of Doctor of Engineering, jointly awarded by the University of Edinburgh, the University of Exeter and the University of Strathclyde.

Waggitt JJ, Cazenave PW, Torres R, Williamson BJ and Scott BE (2016). Quantifying pursuit-diving seabirds' associations with fine-scale physical features in tidal stream environments. Journal of Applied Ecology, 53(6): 1653-1666.

Annex A Further details of video samples selected for manual review

A.1 Video sample 1

Details of video sample 1, corresponding to times of land-based bird and mammal surveys in Bluemull Sound between March 2020 and March 2022. Each row is a 2-hour survey with a 1-hour buffer before and after the survey time (4-hours sample in total). Dates marked * indicate a 5-hour sample.

Date	Time	Total number of videos	Total length of footage (hh:mm)
15/07/2020	12:36 - 17:36	92	23:00
21/07/2020	06:55 - 10:55	80	20:00
21/07/2020	10:23 - 14:23	77	19:15
22/07/2020	06:38 - 10:38	81	20:15
22/07/2020	16:43 - 20:43	60	15:00
01/08/2020	12:11-16:11	88	22:00
24/08/2020	11:25-15:25	43	10:45
24/08/2020	13:50-17:50	27	06:45
25/08/2020	08:18-12:18	37	09:15
25/08/2020	10:18-14:18	34	08:30
27/08/2020	07:07-11:07	25	06:15
27/08/2020	09:07-13:07	32	08:00
31/08/2020	06:31-10:31	34	08:30
31/08/2020	08:35-12:35	40	10:00
10/09/2020	08:16-12:16	33	08:15
10/09/2020	10:16-14:16	30	07:30
13/09/2020	08:22-12:22	31	07:45
13/09/2020	10:22-14:22	27	06:45
23/09/2020	11:46-15:46	28	07:00
23/09/2020	13:49-17:49	41	10:15
09/10/2020	07:29-11:29	47	11:45
09/10/2020	09:29-13:29	60	15:00
18/10/2020	12:44-16:44	19	04:45

Date	Time	Total number of videos	Total length of footage (hh:mm)
27/10/2020	10:29-14:29	40	10:00
01/12/2020*	06:45-11:45	20	05:00
26/01/2021*	11:29-16:29	34	08:30
28/01/2021*	10:45-15:45	31	07:45
27/02/2021*	09:00-14:00	74	18:30
07/03/2021*	09:20-14:20	63	15:45
07/03/2021*	11:20-16:20	57	14:15
02/05/2021	09:30-13:30	51	12:45
12/06/2021	16:40-20:40	67	16:45
15/06/2021	08:43-12:43	10	02:30
15/06/2021	13:16-17:16	37	09:15
16/06/2021	05:23-09:23	63	15:45
16/06/2021	07:34-11:34	69	17:15
16/06/2021	14:03-18:03	26	06:30
17/07/2021	06:13-10:13	47	11:15
03/07/2021	14:59-18:59	0	0
27/07/2021	14:15-18:15	81	20:15
30/07/2021	12:09-16:09	85	21:15
31/07/2021	04:31-08:31	83	20:45
11/08/2021	11:51-15:51	85	21:15
11/08/2021	13:51-17:51	85	21:15
19/08/2021	11:16-15:16	85	21:15
19/08/2021	13:04-17:07	85	21:15
24/08/2021	06:49-10:49	80	20:00
24/08/2021	08:49-12:49	82	20:30
27/08/2021	12:58-16:58	85	21:15
27/08/2021	14:58-18:58	85	21:15
29/08/2021	09:50-13:50	85	21:15
29/08/2021	11:50-15:50	85	21:15
15/09/2021	08:31-12:31	85	21:15
15/09/2021	10:26-14:26	84	21:00

Date	Time	Total number of videos	Total length of footage (hh:mm)
30/09/2021	06:07-10:07	84	21:00
30/09/2021	08:07-12:07	85	21:15
01/10/2021	07:49-11:49	84	21:00
05/10/2021	06:38-10:38	67	16:45
05/10/2021	09:03-13:03	67	16:45
05/10/2021	14:45-18:45	51	12:45
06/10/2021	13:41-17:41	67	16:45
08/10/2021	06:31-10:31	68	17:00
08/10/2021	08:31-12:31	68	17:00
23/10/2021	06:44-10:44	57	14:15
24/10/2021	11:50-15:50	63	15:45
31/10/2021	12:02-16:02	79	19:45
27/12/2021*	07:55-12:55	63	15:45
29/12/2021*	08:43-13:43	90	22:30
07/01/2022*	09:41-14:41	70	17:30
15/01/2022*	09:32-14:32	73	18:15
05/03/2022*	10:39-15:39	47	11:45
06/03/2022*	06:46-11:46	38	09:30

A.2 Video sample 2

Details of video sample 2 defined by the times of significant sightings of diving birds and marine mammals in land-based surveys between March 2020 and March 2022.

Date	Time	Reason for selection	Total number of videos	Total length of footage (hh:mm)
15/07/2020	06:00-21:00	High numbers of European shag and common guillemot recorded in surveys	256	64:00
10/09/2020	06:00-21:00	Minke whale recorded in surveys	63	15:45
13/09/2020	06:00-21:00	Harbour porpoise, gannet and diversity of other birds recorded in surveys	86	21:30
18/10/2020	06:00-21:00	Orca, harbour porpoise, grey seal and red-throated diver recorded in surveys	72	18:00

Date	Time	Reason for selection	Total number of videos	Total length of footage (hh:mm)
27/10/2020	06:00-21:00	Harbour porpoise recorded in surveys	85	21:15
01/12/2020	06:00-21:00	Harbour and grey seal recorded in surveys	37	09:15
27/02/2021	06:00-21:00	Harbour seal and gannet recorded in surveys	115	29:00
15/06/2021	06:00-21:00	Minke whale recorded in surveys	142	35:00
03/07/2021	06:00-21:00	High numbers of puffin recorded in surveys	45	11:15
11/08/2021	06:00-21:00	Harbour porpoise recorded in surveys	253	63:00
19/08/2021	06:00-21:00	Harbour porpoise and high number of shag, black guillemot and gannet recorded in surveys	277	69:00

A.3 Video sample 4

Details of video subset 4 comprising randomly selected days between March 2020 and March 2022, when land-based surveys were not conducted. Days were selected to provide equal coverage across all months (taking account of subset 1).

Date	Time	Reason for selection	Number of videos	Total time of footage in sample
19/04/2021	06:00-21:00	Increase number of sampled days in April	52	13:00
25/11/2021	06:00-21:00	Increase number of sampled days in November	31	07:45
15/04/2021	06:00-21:00	Increase number of sampled days in April	42	10:30
08/11/2021	06:00-21:00	Increase number of sampled days in November	36	09:00
18/05/2021	06:00-21:00	Increase number of sampled days in May	7	01:45
25/05/2021	06:00-21:00	Increase number of sampled days in May	61	15:15
28/02/2022	06:00-21:00	Increase number of sampled days in February	7	01:45
01/04/2022	06:00-21:00	Increase number of sampled days in April	30	07:30
19/02/2022	06:00-21:00	Increase number of sampled days in February	2	00:30
13/05/2022	06:00-21:00	Increase number of sampled days in May	51	12:45

Date	Time	Reason for selection	Number of videos	Total time of footage in sample
17/11/2021	06:00-21:00	Increase number of sampled days in November	33	08:15
25/12/2021	06:00-21:00	Increase number of sampled days in December	13	03:15
01/02/2022	06:00-21:00	Increase number of sampled days in February	27	06:45
28/04/2022	06:00-21:00	Increase number of sampled days in April	42	10:30
30/11/2021	06:00-21:00	Increase number of sampled days in November	28	07:00
16/03/2022	06:00-21:00	Increase number of sampled days in March	13	03:15
25/06/2022	06:00-21:00	Increase number of sampled days in June	61	15:15
11/11/2021	06:00-21:00	Increase number of sampled days in November	35	08:45
15/12/2021	06:00-21:00	Increase number of sampled days in December	27	06:45
03/01/2022	06:00-21:00	Increase number of sampled days in January	20	05:00
23/02/2022	06:00-21:00	Increase number of sampled days in February	5	01:15
13/04/2022	06:00-21:00	Increase number of sampled days in April	32	08:00
21/05/2022	06:00-21:00	Increase number of sampled days in May	52	13:00
07/06/2022	06:00-21:00	Increase number of sampled days in June	61	15:15
10/07/2022	06:00-21:00	Increase number of sampled days in July	12	03:00
26/07/2022	06:00-21:00	Increase number of sampled days in July	58	14:30

Annex B Details of fish sightings in video subset

Details of all fish sightings in the video footage subset reviewed. Sightings are categorised as individual fish (rows highlighted in green), small groups two to five individuals (rows highlighted in yellow) and large groups of more than five individuals (all other rows). Tidal periods at the time of observations are provided (deduced from Nova's hydrodynamic model of Bluemull Sound) and details of observed turbine operational status in footage. Note that * in turbine operating column indicates that tidal period prediction indicates times when the turbines would be expected to be operating but they were not in the footage. These discrepancies are likely to either be due to temporary turbine outages, or the known variation between modelled tidal data and observed flow in Bluemull Sound and the particularly complex nature of the timing of high water slack, most likely due to the effects of meteorological conditions such as storm surges not included in the hydrodynamic model.

Camera	Sample	Time	Tidal period	Turbine operating?	No. fish	Key behavioural observations
10/09/2020 (LW=09:16; HW=15:58)						
T4 Side	1	09:48:13 - 10:03:12	Decreasing ebb	N	> 5	Large shoal swimming around turbine nacelle
T4 Side	1	10:03:13 - 10:18:13	Decreasing ebb	N	> 5	Large shoal swimming around turbine nacelle
T4 Side	1	10:18:13 - 10:33:12	Decreasing ebb	N	> 5	Large shoal swimming around turbine nacelle
T4 Side	1	10:33:13 - 10:48:13	Decreasing ebb	N	> 5	Large shoal swimming around turbine nacelle
13/09/2020 (HW=07:22; LW=13:14)						
T4 Side	2	06:55:13 - 07:10:13	Decreasing flood	N	1	Individual swimming around turbine nacelle
T4 Side	2	07:25:13 - 07:40:12	Decreasing flood	N	> 5	Shoal swimming around the turbine nacelle
T4 Side	2	07:40:13 - 07:55:13	Decreasing flood	N	> 5	Very large shoal swimming around turbine nacelle. Shoal suddenly disappears indicating possible presence of predator (not observed in camera)
T4 Side	1	10:33:13 - 10:48:13	Increasing ebb	N	> 5	Large shoal swims around turbine
T4 Side	1	13:55:14 - 14:10:13	Decreasing ebb	N	> 5	Large shoal swims around turbine
T4 Side	1	14:10:13 - 14:25:12	Decreasing ebb	N	> 5	Large shoal swimming around turbine nacelle.
T4 Side	2	14:25:13 - 14:40:13	Decreasing ebb	N	> 5	Very large shoal swimming around turbine nacelle.
T4 Side	2	14:40:14 - 14:55:13	Decreasing ebb	N	> 5	Very large shoal swimming around turbine. Shoal suddenly disappears indicating possible presence of predator (not observed in camera).
23/09/2020 (LW=08:46; HW=15:13)						
T4 Side	1	14:48:38 - 15:03:38	Decreasing flood	N	> 5	Smaller shoal swimming around turbine

Camera	Sample	Time	Tidal period	Turbine operating?	No. fish	Key behavioural observations
T4 Side	1	15:03:38 - 15:18:37	Decreasing flood	N	> 5	Large shoal swims around turbine
09/10/2020 (LW= 08:29; HW= 15:07)						
T4 Side	1	08:56:36 - 09:11:35	Decreasing ebb	N	> 5	Large shoal swimming around turbine nacelle
T4 Side	1	09:11:36 - 09:26:35	Decreasing ebb	N	> 5	Large shoal swimming around turbine nacelle
T4 Side	1	09:26:35 - 09:41:34	Decreasing ebb	N	> 5	Large shoal swims past turbine
T4 Side	1	09:41:35 - 09:56:34	Decreasing ebb	N	> 5	Large shoal swimming around turbine nacelle
T4 Side	1	09:56:35 - 10:11:35	Decreasing ebb	N	> 5	Large shoal swimming around turbine nacelle
27/10/2020 (HW=07:29; LW=13:15)						
T4 Side	2	07:56:08 - 08:11:08	Decreasing flood	N	> 5	Shoal swimming past turbine
T4 Side	1	14:41:08 - 14:56:08	Decreasing ebb	N	> 5	Small shoal swims past camera
01/12/2020 (HW=10:24; LW=16:13)						
T1 Side	1	10:37:14 - 10:52:09	Decreasing flood	N	2-5	Two fish swim over nacelle
26/01/2021 (HW=08:29; LW=14:29)						
T4 Side	1	16:03:44 - 16:18:44	Decreasing ebb	N	2-5	Four fish pass in front of camera
30/07/2021 (LW=09:09; HW=15:23)						
T4 Side	1	12:07:51 - 12:22:48	Increasing flood	N	> 5	Large shoal swims past turbine
T4 Side	1	12:22:48 - 12:37:46	Increasing flood	N	> 5	Large shoal swims past turbine
T4 Side	1	12:37:47 - 12:52:49	Increasing flood	N	> 5	Large shoal swims past turbine
T4 Side	1	12:52:49 - 13:07:51	Increasing flood	N	> 5	Large shoal swims past turbine
T4 Side	1	13:07:52 - 13:22:46	Increasing flood	N	> 5	Large shoal swims past turbine
T4 Side	1	13:22:47 - 13:37:47	Maximum flood	N*	> 5	Large shoal swims past turbine
T4 Side	1	13:37:48 - 13:52:48	Maximum flood	N*	> 5	Large shoal swims past turbine
T4 Side	1	13:52:48 - 14:07:45	Maximum flood	N*	> 5	Large shoal swims past turbine
T4 Side	1	14:07:46 - 14:22:46	Maximum flood	N*	> 5	Large shoal swims past turbine
T4 Side	1	14:22:47 - 14:37:46	Maximum flood	N*	> 5	Large shoal swims past turbine
T4 Side	1	14:37:46 - 14:52:45	Maximum flood	N*	> 5	Large shoal swims past turbine

Camera	Sample	Time	Tidal period	Turbine operating?	No. fish	Key behavioural observations
T4 Side	1	14:52:46 - 15:07:46	Decreasing flood	N	> 5	Large shoal swims past turbine
11/08/2021 (LW=06:24; HW=12:51)						
T4 Side	1	11:58:26 - 12:13:27	Maximum flood	N*	> 5	Very large shoal swims past turbine
T4 Side	1	12:13:27 - 12:28:25	Decreasing flood	N	> 5	Large Shoal swims past turbine
T4 Side	1	12:28:26 - 12:43:34	Decreasing flood	N	> 5	Large shoal swims past turbine.
19/08/2021 (HW=08:16; LW=14:07)						
T4 Side	2	07:25:24 - 07:40:24	Decreasing flood	N	> 5	Shoal swims past camera.
T4 Side	2	07:40:24 - 07:55:23	Decreasing flood	N	> 5	Shoal swims past camera.
T4 Side	2	07:55:24 - 08:10:25	Decreasing flood	N	> 5	Shoal swims past camera.
T4 Side	2	18:40:25 - 18:55:26	Maximum flood	Y	> 5	Shoal milling very close to camera, appearing to shelter behind nacelle.
T4 Side	2	18:55:27 - 19:10:26	Maximum flood	Y	> 5	Shoal milling very close to camera, appearing to shelter behind nacelle.
27/08/2021 (LW=07:37; HW=13:58)						
T4 Side	1	13:29:34 - 13:44:34	Decreasing flood	N	1	Individual swims in front of camera
30/09/2021 (HW=05:07; LW=11:03)						
T4 Side	1	06:04:36 - 06:19:36	Decreasing flood	N	2-5	Three fish swim over the top of camera.
T4 Side	1	07:19:32 - 07:34:31	Decreasing flood	N	1	Individual swims in front of camera.
T4 Side	1	07:34:32 - 07:49:32	Decreasing flood	N	2-5	Up to five fish swim past camera.
T4 Side	1	11:34:32 - 11:49:32	Decreasing ebb	N	2-5	Three fish swim past turbine.
T4 Side	1	12:04:33 - 12:19:32	Decreasing ebb	N	2-5	Five fish swim past turbine.
05/10/2021 (HW=10:03; LW=15:45)						
T4 Side	1	09:31:26 - 09:46:26	Decreasing flood	N	> 5	Small shoal swims past turbine.
T4 Side	1	09:46:27 - 10:01:26	Decreasing flood	N	> 5	Small shoal swims past turbine.
T1 Top	1	15:31:30 - 15:46:30	Decreasing ebb	N	> 5	Small shoal swims past turbine.
T4 Side	1	15:46:26 - 16:01:26	Decreasing ebb	N	> 5	Small shoal swims past camera.
T1 Top	1	15:46:30 - 16:01:25	Decreasing ebb	N	> 5	Small shoal swims past camera.
T1 Top	1	16:01:26 - 16:16:26	Decreasing ebb	N	2-5	Three fish appear to be feeding on seaweed on nacelle.

Camera	Sample	Time	Tidal period	Turbine operating?	No. fish	Key behavioural observations
T4 Side	1	16:01:27 - 16:16:26	Decreasing ebb	N	2-5	Small group swims past turbine.
06/10/2021 (HW=10:41; LW=16:22)						
T4 Side	1	16:18:51 - 16:33:50	Decreasing ebb	N	> 5	Group of six fish milling around turbine.
T4 Side	1	16:33:49 - 16:48:49	Decreasing ebb	N	> 5	Large group milling around turbine.
T1 Top	1	16:33:52 - 16:48:52	Decreasing ebb	N	> 5	Many fish milling around turbine.
T4 Side	1	16:48:50 - 17:03:49	Decreasing ebb	N	> 5	Large shoal milling around turbine.
T1 Top	1	16:48:52 - 17:03:52	Decreasing ebb	N	> 5	Large shoal swims over top of camera.
08/10/2021 (LW=05:31; HW=12:01)						
T4 Side	1	11:23:37 - 11:38:36	Decreasing flood	N	> 5	Large shoal swims around turbine. Shoal suddenly disappears indicating possible presence of predator (not observed in camera).
T4 Side	1	11:38:37 - 11:53:38	Decreasing flood	N	1	Individual swims past camera.
24/10/2021 (LW=06:12; HW=12:50)						
T4 Side	1	12:32:57 - 12:47:56	Decreasing flood	N	> 5	Large shoal swimming around the turbine.
T4 Side	1	12:47:57 - 13:02:57	Decreasing flood	N	> 5	Large shoal milling around the turbine.
31/10/2021 (LW=12:02; HW=18:20)						
T4 Side	1	13:20:43 - 13:35:42	Decreasing ebb	N	> 5	Large shoal swimming around the turbine.
T4 Side	1	13:35:43 - 13:50:42	Decreasing ebb	N	> 5	Large shoal swimming around the turbine.
08/11/2021 (HW=12:07)						
T4 Side	4	12:41:14 - 12:56:13	Decreasing flood	N	> 5	Shoal swims past turbine.
T4 Side	4	12:56:14 - 13:11:14	Decreasing flood	N	> 5	Shoal swims past turbine.